This is a digital copy of a book that was preserved for generations on library shelves before it was carefully scanned by Google as part of a project to make the world's books discoverable online.

It has survived long enough for the copyright to expire and the book to enter the public domain. A public domain book is one that was never subject to copyright or whose legal copyright term has expired. Whether a book is in the public domain may vary country to country. Public domain books are our gateways to the past, representing a wealth of history, culture and knowledge that's often difficult to discover.

Marks, notations and other marginalia present in the original volume will appear in this file - a reminder of this book's long journey from the publisher to a library and finally to you.

Usage guidelines

Google is proud to partner with libraries to digitize public domain materials and make them widely accessible. Public domain books belong to the public and we are merely their custodians. Nevertheless, this work is expensive, so in order to keep providing this resource, we have taken steps to prevent abuse by commercial parties, including placing technical restrictions on automated querying.

We also ask that you:

+ *Make non-commercial use of the files* We designed Google Book Search for use by individuals, and we request that you use these files for personal, non-commercial purposes.
+ *Refrain from automated querying* Do not send automated queries of any sort to Google's system: If you are conducting research on machine translation, optical character recognition or other areas where access to a large amount of text is helpful, please contact us. We encourage the use of public domain materials for these purposes and may be able to help.
+ *Maintain attribution* The Google "watermark" you see on each file is essential for informing people about this project and helping them find additional materials through Google Book Search. Please do not remove it.
+ *Keep it legal* Whatever your use, remember that you are responsible for ensuring that what you are doing is legal. Do not assume that just because we believe a book is in the public domain for users in the United States, that the work is also in the public domain for users in other countries. Whether a book is still in copyright varies from country to country, and we can't offer guidance on whether any specific use of any specific book is allowed. Please do not assume that a book's appearance in Google Book Search means it can be used in any manner anywhere in the world. Copyright infringement liability can be quite severe.

About Google Book Search

Google's mission is to organize the world's information and to make it universally accessible and useful. Google Book Search helps readers discover the world's books while helping authors and publishers reach new audiences. You can search through the full text of this book on the web at `http://books.google.com/`

B 427153

TRANSACTIONS

OF THE

New England

COTTON MANUFACTURERS' ASSOCIATION.

Founded April 20, 1865. Incorporated Dec. 1, 1894.

NO. 69.

SEMI-ANNUAL MEETING.

Held in the Arlington Hotel, Washington, D. C.,

OCTOBER 16-18, 1900.

Office of the Association:

Room 57, International Trust Building, 45 Milk Street,
Corner of Devonshire St., Boston, Mass.

WALTHAM, MASS.:
PRESS OF P. L. BARRY.
1900.

1837
ARTES VERITAS SCIENTIA
LIBRARY OF THE
UNIVERSITY OF MICHIGAN
TUEBOR
SI QUAERIS PENINSULAM AMOENAM CIRCUMSPICE

THE GIFT OF
Association

TS
1550
.N2

NEW ENGLAND

Cotton Manufacturers' Association.

Proposal for

Membership of

Notice to Members.

To make the Cotton Manufacturers' Association an absolutely representative body it must include as many as possible of those who are eligible for membership. It has been found that many who were eligible and desired to join had not done so because not invited. It is hoped that every member will present the matter to non-members among his associates. The accompanying blank proposition for membership can be detached from the cover at the row of perforations.

NEW ENGLAND

Cotton Manufacturers' Association.

Proposal for

.....

Membership of

.....

Application Received

.....190 .

Action by Board of Government, ...*favorable.*

.....190 .

Voted by the Association, ...*elected,*

.....190 .

New

Cotton Manufacti

Room 57, Internation

45 MILK ST

BOSTON, M

PROPOSAL FOR ME

(When filled out, to be mailed to the Secretary, P. O. 1
Mass., in time for action by the Board of Government, at least
a meeting of the Association.)

Mr. .....

Position, ...

P. O. Address, ...

is proposed for ..... *membership in the* NEW ENGLAND
active or associate

MANUFACTURERS' ASSOCIATION *by* .....
signature of member proposing candidate.

a member of the Association.

Experience of Applicant, (Please state, in full, particulars of detail, giving names, dates and nature of work, as fully as convenient.)

.....

.....

.....

.....

.....

.....

.....

.....

.....

The undersigned certifies that the above statements are correct, and agrees that, if elected to the Association, he will be governed by its rules as long as his connection with it shall continue.

Date, ... 190 .

.....
signature of candidate.

TRANSACTIONS

OF THE

New England

COTTON MANUFACTURERS' ASSOCIATION.

Founded April 20, 1865. Incorporated Dec. 1, 1894.

NO. 69.

SEMI-ANNUAL MEETING.

Held in the Arlington Hotel, Washington, D. C.,

OCTOBER 16-18, 1900.

Office of the Association:

Room 57, International Trust Building, 45 Milk Street,
Corner of Devonshire St., Boston, Mass.

WALTHAM, MASS.:

PRESS OF E. L. BARRY,

1900.

ENTERED ACCORDING TO ACT OF CONGRESS
IN THE YEAR 1900
BY THE NEW ENGLAND COTTON MANUFACTURERS' ASSOCIATION,
IN THE OFFICE OF THE LIBRARIAN OF CONGRESS
AT WASHINGTON.

By vote of the Board of Government, the price of the *Transactions* is $5.00 per copy to non-members. The price of this issue and the one previous is $1.00 each to members, and the prices of copies previous to Volume 61, is 50 cents to members, but each member is entitled to a copy as a part of the privilege of membership.

CHARTER.

No. 6091.

Commonwealth of Massachusetts.

BE IT KNOWN, That whereas, EDWARD W. THOMAS, C. J. H. WOODBURY, WILLIAM J. KENT, F. M. MESSENGER, HARRY T. WHITIN, ARTHUR H. LOWE, ALBERT F. KNIGHT, ALFRED M. GOODALE, FRED C. MCDUFFIE and GEORGE W. BEAN have associated themselves with the intention of forming a corporation under the name of the NEW ENGLAND COTTON MANUFACTURERS' ASSOCIATION, for the purpose of encouraging scientific investigation and experiment as to the methods of manufacturing cotton; collecting and imparting information relating to this industry, promoting social intercourse among its members; and establishing and maintaining a library of works on textiles in the city of Boston, and have complied with the provisions of the Statutes of this Commonwealth in such case made and provided, as appears from the certificate of the President, Treasurer and Directors of said corporation, duly approved by the Commissioner of Corporations, and recorded in this office.

Now, Therefore, I, WILLIAM M. OLIN, Secretary of the Commonwealth of Massachusetts, do hereby certify that said EDWARD W. THOMAS, C. J. H. WOODBURY, WILLIAM J. KENT, F. M. MESSENGER, HARRY T. WHITIN, ARTHUR H. LOWE, ALBERT F. KNIGHT, ALFRED M. GOODALE, FRED C. MCDUFFIE and GEORGE W. BEAN, their associates and successors, are legally organized and established as and are hereby made an existing corporation under the name of the

NEW ENGLAND COTTON MANUFACTURERS' ASSOCIATION,

with the powers, rights and privileges, and subject to the limitations, duties and restrictions which by law appertain thereto.

Seal of the Commonwealth of Massachusetts.

Witness my official signature hereunto subscribed, and the seal of the Commonwealth of Massachusetts hereunto affixed this first day of December, in the year of our Lord one thousand eight hundred and ninety-four.

WILLIAM M. OLIN,

Secretary of the Commonwealth.

187069

Commonwealth of Massachusetts.

(Acts of 1895, Chap. 163.)

AN ACT TO AUTHORIZE THE NEW ENGLAND COTTON MANUFACTURERS' ASSOCIATION TO HOLD ITS MEETINGS WITHOUT THE COMMONWEALTH.

Be it enacted, etc., as follows:

SECTION 1. The New England Cotton Manufacturers' Association is hereby authorized to hold its meetings in any state or territory of the United States and in the District of Columbia; provided, however, that its annual meeting shall be held in this Commonwealth at least once in five years.

SECT. 2. This act shall take effect upon its passage. [Approved March 23, 1895.]

NEW ENGLAND COTTON MANUFACTURERS' ASSOCIATION.

FOUNDED APRIL 20, 1865.

INCORPORATED DECEMBER 1, 1894.

CONSTITUTION AND BY-LAWS.

ACTIVE MEMBERS.

ARTICLE 1. Any person who is actively engaged as President, Treasurer, Agent, Superintendent or Manager in the manufacture, printing or finishing of cottons shall be eligible for active membership.

ELECTION OF MEMBERS.

ARTICLE 2. All nominations for membership shall be made in writing, at least one week before the date of any regular meeting, and shall be considered by the Board of Government, and reported to the meeting, favorably or adversely, for the action of the Association. *Provided*, that in case the Board shall decide to report adversely upon any nomination, the member who shall have made it shall be informed of the intention so to report, in order that he may have an opportunity to withdraw the name. Upon such report active members may be admitted, if they obtain a majority of votes of the members present and voting therefor, by acceptance in writing, and paying an admission fee of ten dollars, and maintaining their membership by the payment of an annual assessment not exceeding ten dollars.* Any member failing to pay two successive assessments shall cease to be a member at the end of six months from the date when such second assessment shall become due. Any member may withdraw from the Association upon payment of all arrearages, first giving notice of his intention so to do, in writing, to the Secretary, and the Board of Government may accept such resignation; and any member may be expelled for cause,

* This assessment has never exceeded five dollars for active members and ten dollars for associate members.

at any regular meeting, two-thirds of the members present voting therefor.

ASSOCIATE MEMBERS.

ARTICLE 3. Persons engaged in the manufacture of cotton or cotton fabrics, or the manufacture of textile machinery, or industries kindred to the cotton manufacture, may become associate members of the Association. The methods of application, nomination, election and withdrawal from the Association being under the same conditions as those provided for active members in Article 2, excepting that this class of membership does not carry with it the privilege of voting or speaking, except by permission from the Board of Government or a vote of the Association to allow permission.

The initiation fee for associate members shall be twenty-five dollars, and the annual assessment shall be double the sum annually voted for active members.

Associate members may be expelled by a majority vote of the Board of Government.

HONORARY MEMBERS.

ARTICLE 4. Honorary members may be elected, when recommended by the Board of Government, at any regular meeting of the Association, who shall be enrolled as such, and shall be entitled to attend the meetings of the Association and participate in its proceedings, without the right to vote. They shall not be subject to payment of admission fees or assessments. No person actively engaged in cotton manufacture shall be eligible to honorary membership.

ARTICLE 5. It shall be the duty of all members of the Association to make returns to the Secretary of such statistics as may be called for by him, under the direction of any committee duly appointed for the collection of statistics, when not incompatible with private interests.

OFFICERS.

ARTICLE 6. The officers of this Association shall be a President. two Vice-Presidents, six Directors, a Treasurer, Secretary, and Auditor of Accounts.

ELECTION OF OFFICERS.

ARTICLE 7. At each annual meeting there shall be chosen by ballot a President, two Vice-Presidents and two Directors; the President and Vice-Presidents to serve one year, and the two Directors shall be chosen for terms of three years.

DUTIES OF OFFICERS.

ARTICLE 8. The President, or in his absence the senior Vice-President present, shall preside at all meetings of the Association and of the Board of Government. All officers shall hold their respective offices until their successors shall be chosen and accept their positions.

ARTICLE 9. The President, Vice-Presidents and Directors shall constitute a Board of Government, and have under their care and direction all matters pertaining to the management of the Association; and five of their number shall constitute a quorum for the transaction of business. Meetings of the board may be called by the President, at such time and place as he may deem expedient, giving each member a written or printed notice of the same at least five days before the day of meeting. At their first meeting the board shall elect a Treasurer, Secretary, and Auditor of Accounts for the year ensuing, and fix the amount of compensation of the Secretary. All vacancies in their board occasioned by death or resignation shall be filled by the board; and the persons so elected shall hold their offices until the next annual meeting. The board may, from time to time, as they shall deem expedient, appoint committees, from among their own board or from the members at large, to collect statistical information, examine new inventions or processes in manufacturing goods, as also to prepare essays on subjects of interest to the Association.

ARTICLE 10. The Treasurer shall keep a book in which all receipts and payments of money shall be entered, collect all moneys due the Association, and disburse the same upon the written order of the Board of Government. At the annual meeting in each year he shall make an exhibit of his accounts, or oftener if the Board of Government require it. He shall notify the members of assessments voted, and cause them to be collected in a reasonable time.

ARTICLE 11. The Secretary shall attend all meetings of the Association and of the Board of Government, and keep accurate records of

their doings. In the absence of the Secretary at any meeting, a Secretary *pro tem.* may be appointed by the presiding officer, who shall be sworn to do all things, while in office, required of the Secretary.

ARTICLE 12. The Auditor shall examine the accounts of the Treasurer annually, and report at each meeting the state of the finances.

MEETINGS.

ARTICLE 13. The annual meeting of the members of the Association shall be held on the last Wednesday of April, or at such other time, and at such hour and place as the Board of Government may appoint. There shall also be a semi-annual meeting of the Association on the last Wednesday of October, in each and every year, or at such other time, and at such place and hour as the Board of Government may appoint.

Special meetings may be called by the Board of Government whenever they deem it expedient, or upon the written application of any ten members, made to the Secretary.

ARTICLE 14. All meetings of the members of the Association shall be in pursuance of a written or printed notice, addressed to each member, with the name of the President or Secretary attached thereto, and deposited in the Post Office ten days at least before the day of meeting, specifying the time and place of meeting; and at all such meetings fifteen members shall constitute a quorum for the transaction of business.

ARTICLE 15. Amendments to the By-Laws may be made at any stated meeting of the Association by a two-thirds vote; *provided*, notice of such proposed amendment be given in writing at a previous meeting, and also notice be given to each member by the Secretary, of the pendency of such amendment, ten days at least before any such meeting.

BOARD OF GOVERNMENT.

1900.

PRESIDENT.

D. M. THOMPSON, ... PROVIDENCE, R. I.

VICE-PRESIDENTS.

CHARLES H. RICHARDSON, . . CLINTON, MASS.
GEORGE H. HILLS, ... FALL RIVER, MASS.

DIRECTORS.

ALFRED E. ADAMS, ... WHITINSVILLE, MASS.
CHARLES H. FISH, ... DOVER, N. H.
JOHN TEMPEST MEATS, . . . TAUNTON, MASS.
HERBERT E. WALMSLEY, . . . NEW BEDFORD, MASS.
A. TENNY WHITE, ... MANVILLE, R. I.
GEORGE F. WHITTEN, . . . MANCHESTER, N. H.

AUDITOR.

C. E. ROBERTS, ... BOSTON, MASS.

SECRETARY AND TREASURER.

C. J. H. WOODBURY, P. O. Box 3672, BOSTON, MASS.

OFFICE OF THE ASSOCIATION:

ROOM 57, INTERNATIONAL TRUST BUILDING, 45 MILK STREET, CORNER OF DEVONSHIRE STREET, BOSTON, MASS.

OFFICERS OF THE ASSOCIATION,

FROM THE FIRST ORGANIZATION.

PRESIDENTS.

Ezekiel A. Straw,	1865–78	Robert McArthur,	1892–94
Amos D. Lockwood,	1878–80	Edw. W. Thomas,	1894–95
John Kilburn,	1880–83	A. M. Goodale,	1895–96
William C. Lovering,	1883–85	Arthur H. Lowe,	1896–97
Richard Garsed,	1885–86	Russell W. Eaton,	1897–98
J. S. Ludlam,	1886–88	Stephen A. Knight,	1898–99
Henry F. Lippitt,	1888–89	Frederick E. Clarke,	1899–
Walter E. Parker,	1889–92	D. M. THOMPSON,	1900–

VICE-PRESIDENTS.

Amos D. Lockwood,	1865–77	Arnold B. Sanford,	1888–91
William A. Burke,	1865–73	Robert McArthur,	1889–92
John C. Palfrey,	1873–76	Simeon B. Chase,	1891–93
Edward Atkinson,	1876–78	E. W. Thomas,	1892–94
A. G. Cumnock,	1877–80	A. M. Goodale,	1893-95
Charles Nourse,	1878–81	William J. Kent,	1894–97
William F. Goulding,	1880–83	Fred. C. McDuffie,	1895–00
Richard Garsed,	1881–85	Henry T. Whitin,	1897–00
J. S. Ludlam,	1883–86	C. H. RICHARDSON,	1900–
Walter E. Parker,	1885–89	GEORGE H. HILLS,	1900–
Richard B. Borden,	1886–88		

DIRECTORS.

J. S. Davis,	1865–69
Charles Nourse,	1865–78
Phineas Adams,	1865–74
William P. Haines,	1865–69
Thomas J. Borden,	1865–78
Daniel D. Crombie,	1865–68
Cyrus I. Barker,	1875–80
Hervey Kent,	1877–81
David J. Johnston,	1878–82
Walter Paine, 3d,	1878–80
Chas. L. Lovering,	1878–83
Richard Garsed,	1880–81
William H. Jennings,	1880–83
Chas. D. McDuffie,	1881–83
Walter E. Parker,	1881–85
John W. Danielson,	1881–85
William E. Barrows,	1882–83
Rufus A. Maxfield,	1883–86
George W. Weeks,	1883–86
Henry S. Howe,	1883–87
Richard B. Borden,	1883–86
O. S. Brown,	1885–91
Henry F. Lippitt,	1885–88
Wilbur A. Stiles,	1886–88
Stephen N. Bourne,	1886–91
John Kilburn,	1870–80
William P. Haines,	1874–78
Robert McArthur,	1886–89
A. M. Wade,	1868–69
D. J. Johnston,	1869–70
A. G. Cumnock,	1869–77
F. E. Clarke,	1869–75
S. S. Spencer,	1887–90
E. W. Thomas,	1888–92
William W. Whitin,	1888–93
Robert R. Smith,	1889–92
Alfred M. Goodale,	1890–93
William J. Kent,	1891–94
Herman F. Straw,	1891–93
Fred C. McDuffie,	1892–95
George W. Bean,	1892–95
F. M. Messenger,	1893–95
Arthur H. Lowe,	1894–96
Henry T. Whitin,	1894–97
Herbert L. Pratt,	1895–98
Stephen A. Knight,	1895–98
Russell W. Eaton,	1896–97
Albert F. Knight,	1893–99
John Eccles,	1895–99
C. H. Richardson,	1897–00
George H. Hills,	1897–00
JOHN T. MEATS,	1898–
GEO. F. WHITTEN,	1898–
A. TENNY WHITE,	1899–
ALFRED E. ADAMS,	1899–
H. E. WALMSLEY,	1900–
CHARLES H. FISH,	1900–

AUDITORS.

BENJAMIN SAUNDERS,	1865–71	J. HERBERT SAWYER,	1882–00
JOHN C. PALFREY,	1871–73	C. E. ROBERTS,	1900–
HENRY D. SULLIVAN,	1873–82		

SECRETARY AND TREASURER.

AMBROSE EASTMAN,	1865–94	C. J. H. WOODBURY,	1894

MEMBERS OF THE ASSOCIATION.

Oct. 18, 1900.

Members of the Association are respectfully requested to scrutinize the following list, and advise the Secretary, P. O. Box 3672, Boston, Mass., of change in address, or any error in regard to their names.

As a number of members rejoined the Association after severing their first membership, the date of their earliest election is given.

HONORARY MEMBERS.

George Arms	Grand Hotel	New York City	Oct. 16, 1872.
Jones S. Davis	Hampshire Co., So. Hadley, Mass.		Oct. 27, 1897.
Ambrose Eastman	53 State St.	Boston, Mass.	Sept. 27, 1894.
Samuel Webber	Hydraulic Engineer	Charlestown, N. H.	Apr. 28, 1897.

ACTIVE MEMBERS.

Alfred E. Adams	Agt. Whitinsville Cotton Mills Agt. Linwood Mills	Whitinsville, Mass.	Apr. 27, 1887.
John S. Adams, Jr.	Supt. Adams Bros. Mfg. Co. 120 Commercial St.,	Adams, Mass.	Apr. 29, 1896.
Joseph D. Aiken	Asst. Supt. Ponemah Mills	Taftville, Conn.	Oct. 28, 1891.
F. S. Akin	Supt. Cornell Mills	Fall River, Mass.	Sept. 27, 1894.
Charles T. Aldrich	Treas. Aldrich Mfg. Co. Box 34,	Providence, R. I.	Apr. 28, 1886.
B. A. Alexander	Supt. Boston Duck Co.	Bondsville, Mass.	Apr. 28, 1898.
Franklin Allen	Supt. Boott Mills	Lowell, Mass.	Oct. 18, 1900.
George E. Ames	Mech. Supt. Lawrence Mfg. Co.	Lowell, Mass.	Apr. 24, 1895.
William Ames	Treas. Fletcher Manufg. Co., Box 83, 47 Charles St.,	Providence, R. I.	Apr. 30, 1879.
Charles B. Amory	Treas. Hamilton Manufg. Co. 70 Kilby St.,	Boston, Mass.	Apr. 25, 1894.
Frederic Amory	Treas. Nashua Mfg. Co. and Jackson Mfg. Co. Room 51, Simmons B'l'd., 40 Water St.,	Boston, Mass.	Apr. 27, 1899.

Thomas Armstrong . . Supt. No. Pownal Mfg. Co. . . . . No. Pownal, Vt. . . Oct. 27, 1897.
Abel T. Atherton . . . Machine Maker . . . . . Bay Side, R. I. . . . Oct. 16, 1872.
Edward Atkinson . . . Prest. Boston Mfrs. Mu. Fire Ins. Co. . . . . 31 Milk St., Boston, Mass. . . . Apr. 19, 1871.
E. W. Atkinson . . . . Stoddard, Haserick, Richards & Co. . . . . 152 Congress St., Boston, Mass. . . . Oct. 27, 1886.
H. C. Atwood . . . . Treas. Williamsville Manufg. Co. . . Providence, R. I. . . Apr. 29, 1885.
James A. Atwood . . . Agt. Wauregan Co. and Quinebaug Co. . . . . Wauregan, Conn. . . Oct. 28, 1891.
John Walter Atwood . Supt. Wauregan Co. . . . . Wauregan, Conn. . . Oct. 24, 1895.
W. E. Atwood . . . . Secy. and Asst. Treas. Williamsville Manufg. Co. . . . . Killingly, Conn. . . . Sept. 27, 1894.
George A. Ayer . . { Supt. City Mfg. Corp. / Supt. Bristol Mfg. Corp. } 123 Fifth St., New Bedford, Mass. Apr. 24, 1895.

Charles L. Bailey . . . . . Waltham, Mass. . . Sept. 27, 1894.
Henry A. Bailey . . . Agt. Chicopee Manufg. Co. . . . . Chicopee Falls, Mass. Oct. 25, 1893.
Dickerson G. Baker . . Asst. Mech. Eng., American Thread Co. . . . . Willimantic, Conn. . Oct. 18, 1900.
Edwin H. Baker . . . Bliss, Fabyan & Co., Box 2899 . . . . . 117 Duane St., New York City, N. Y. Apr. 24, 1878.
Edward R. Ballou . . . Treas. Ballou Yarn Converting Co., ... 189 Charles St., Providence, R. I. . . Apr. 25, 1894.
William P. Bancroft . . Vice-Pres. Joseph Bancroft & Sons Co. . . . . Wilmington, Del. . . Oct. 31, 1883.
Louis B. Barker . . . Agt. United States Cotton Co. . . . Central Falls, R. I. . Apr. 27, 1899.
Lewis E. Barnes . . . Agt. Pemberton Co. & Methuen Co., Methuen, Mass. . . . Oct. 24, 1895.
William A. Barrell . . Agt. Lawrence Duck Co. . . . . Lawrence, Mass. . . Apr. 30, 1884.
Thomas Barrett, Jr. . . Pres. Langley & Aiken Mills . . . Augusta, Ga. . . . . Apr. 26, 1900.
Edwin N. Bartlett . . . Supt. Sigourney and Rockdale Mills, North Oxford, Mass. . Apr. 29, 1891.
Daniel Moore Bates, . Asst. Supt. Joseph Bancroft & Sons Co., ... Rockford, Wilmington, Del. . . Apr. 28, 1898.
Joseph P. Battles . . . Treas. Lewiston Mach. Co. . . . . Lewiston, Me. . . . Oct. 24, 1895.
Edward C. Beach . . Agt. Mass. Mills in Georgia . . . . Lindale, Georgia . . Oct. 5, 1899.
George W. Bean . . . Agt. Androscoggin Mills . . . . . Lewiston, Me. . . . Apr. 17, 1872.
Robert Beatty . . . . Robert Beatty & Co. . . . . Coral and Adams Sts., Philadelphia, Pa. . . Oct. 27, 1897.
Truman Beckwith . . . Treas. Dyerville Manufg. Co. Box 171, Providence, R. I. . . Apr. 27, 1892.
John W. Bell . . . . . Asst. Treas. and Mgr. Smith & Dove Manufg. Co. . . . . Andover Mass. . . . Oct. 27, 1897.
A. C. Bent . . . . . Agt. Safety Seamless Pocket Co. . . Taunton, Mass. . . . Oct. 27, 1897.
W. N. Blackstone . . { Treas. Attawaugan Co. / Treas Totokett Mills Co } . . . . Norwich, Conn. . . . Apr. 29, 1896.
William W. Blades . . Gen. Supt. Lorraine Mfg. Co. . . . . 135 Mineral Spring Ave., Pawtucket, R. I. . . Oct. 25, 1893.
T. Ashby Blythe . . . Proprietor Ashby Cotton Mills . . . . . 114 Chestnut St., Philadelphia, Pa. . . Oct. 27, 1897.

John P. Bodge	Treas. Arkwright Mills	Fall River, Mass.	Oct. 27, 1897.
Jefferson Borden, Jr.	Supt. Fall River Bleachery	Fall River, Mass.	Apr. 27, 1899.
Nathaniel B. Borden	Treas. Barnard Manufg. Co.	Fall River, Mass.	Oct. 15, 1873.
Richard B. Borden	Treas. Richard Borden Mfg. Co. Treas. Troy C. & W. Mfg. Co.	Fall River, Mass.	July 18, 1866.
Thomas J. Borden	Pres. Richard Borden Manufg. Co.	Box 118, Fall River, Mass.	Apr. 20, 1865.
E. S. Boss	Agt. Willimantic Linen Co.	Willimantic, Conn.	Oct. 29, 1879.
Henry D. Bourne	Treas. Hooksett Mills	Manchester, N. H.	Oct. 18, 1900.
Stephen N. Bourne	Agt. Stark Mills	Manchester, N. H.	Oct. 21, 1869.
Frank A. Bowen	Supt. Appleton Co.	Lowell, Mass.	Apr. 28, 1897.
Arthur F. Brackett	Supt. Royal Arctic & Valley Queen Mills,	Riverpoint, R. I.	Oct. 24, 1895.
A. W. Brainerd	Gen. Mgr. Millville Mfg. Co. and May's Landing Water Power Co.	Millville, N. J.	Apr. 28, 1898.
Ernest Bridge	Supt. Jas. Chadwick & Bro. Ltd.	Jersey City, N. J.	Apr. 24, 1895.
Christopher P. Brooks	Managing Director New Bedford Textile School	New Bedford, Mass.	Apr. 28, 1897.
Henry R. Brown	Supt. Hope Co. and Phenix Mill, Box 56,	Phenix, R. I.	Apr. 28, 1897.
Isaac A. Brown	Treas. Narragansett Mills . Box 324,	Fall River, Mass.	Sept. 29, 1898.
James W. Brown	P. O. Box 312,	Ipswich, Mass.	Oct. 24, 1895.
O. S. Brown	Agt. Salmon Falls Manufg. Co.	Salmon Falls, N. H.	Apr. 21, 1875.
Thomas J. Brown	George Brown's Sons	Mt. Joy, Penn.	Oct. 27, 1897.
E. C. Bucklin	Treas. Interlaken Mills and Treas. Harris Mfg. Co.	Butler's Exchange, Box 289, Providence, R. I.	Apr. 25, 1883.
Robert Burgess	Agt. Grinnell Mfg. Corp.	745 County St., New Bedford, Mass.	Apr. 27, 1892.
Edward N. Burke	Lowell Machine Shop	Lowell, Mass.	Apr. 28, 1880.
Alfred H. Burnham	Mgr. Glasgow Mills	Huntington and Jasper Sts., Philadelphia, Pa.	Apr. 26, 1900.
Hervey Burnham	Supt. Beaver Mills and Eclipse Mill	295 Beaver St., North Adams, Mass.	Apr. 27, 1899.
W. R. Burnham		Norwich, Conn.	Apr. 29, 1885.
William D. Cadwell	Agt. Nashua Mfg. Co. & Jackson Co.,	67 Concord St., Nashua, N. H.	Apr. 19, 1871.
William H. Cadwell	Supt. Jackson Company	Nashua, N. H.	Apr. 26, 1900.
John P. Campbell	Supt. New York Mills,	New York Mills, Oneida Co., N. Y.,	Sept. 22, 1896.
Byron F. Card	Agt. Howland Mills	New Bedford, Mass.	Apr. 25, 1888.
George A. Chace	Treas. Bourne Mills	Fall River, Mass.	Apr. 25, 1877.
John W. Chafee	Pres. and Treas. The Sibley Mfg. Co.	Augusta, Ga.	Oct. 18, 1900.
James C. Chalmers	Vice-Pres. Renfrew Mfg. Co.	Adams, Mass.	Oct. 5, 1899.
Simeon B. Chase	Treas. King Philip Mills	Fall River, Mass.	Apr. 21, 1875.
Clarence N. Childs	Asst. Supt. Hamilton Manufg. Co.	43 Pine St., Lowell, Mass.	Apr. 24, 1895.
Elmer G. Childs	Agt. Boston Duck Co.	Bondsville, Mass.	Oct. 26, 1892.

Jno. H. C. Church	Asst. Treas and Sec. Monument Mills	Gt. Barrington, Mass.	Apr. 28, 1897.
Ernest E. Clark	Asst. Supt. H. N. Slater Mills	Webster, Mass.	Apr. 29, 1896.
George A. Clark	Supt. Manchester Mills	Manchester, N. H.	Oct. 25, 1882.
Alfred Clarke	Gen'l Mgr.	23 Central St., Boston, Mass.	Apr. 30, 1879.
E. N. Clemence	Sec. and Treas. Eagle & Phenix Mills and Agt. for Receivers	Columbus, Ga.	Apr. 28, 1897.
W. H. Cloher, Jr.	Treas. Utica Cotton Co.	Capron, Oneida Co., N. Y.	Sept. 22, 1896.
Josiah G. Coburn		99 Washington St., Newton, Mass.	Apr. 20, 1865.
Charles H. Collins	Supt. Berkeley Co.	Ashton, R. I.	Apr. 26, 1900.
John A. Collins	Supt. American Linen Co.	73 Cottage St., Fall River, Mass.	Oct. 31, 1883.
B. B. Comer	Pres. and Treas. Avondale Cotton Mills	Birmingham, Ala.	Apr. 26, 1900.
Frank B. Comins	Treas. American Moistening Co.	150 Devonshire St., Room 67, Boston, Mass.	Oct. 28, 1891.
Caesar Cone	Pres. Proximity Mfg. Co.	Greensboro, N. C.	Apr. 26, 1900.
John J. Connell	Supt. Cohannet Mills	Taunton, Mass.	Apr. 27, 1892.
Frank H. Cotton	Mgr. Hope Mills Mfg. Co.	Hope Mills, N. C.	Apr. 27, 1899.
Alphonse S. Covel	Treas. Tremont and Suffolk Mills,	P. O. Box 1716, 70 Kilby St., Boston, Mass.	Oct. 31, 1877.
William W. Crapo	Pres. Wamsutta Mills	New Bedford, Mass.	Sept. 29, 1898.
P. T. Creed	Agt. Hopewell Mills	Box 356, Taunton, Mass.	Sept. 22, 1896.
John B. Cudlip	Supt. Gibson Cotton Mills	Marysville, N. Bruns.	Apr. 28, 1897.
H. H. Culver	Supt. Elizabeth Poole Mills	39 Ashland St., Taunton, Mass.	Apr. 28, 1897.
Henry S. Culver	Supt. Westville Cotton Mill	Taunton, Mass.	Apr. 28, 1897.
A. G. Cumnock	Treas. Appleton Co.	Lowell, Mass.	Oct. 28, 1885.
Andrew J. Currier	Mgr. Albion and Valley Falls Co.	Valley Falls, R. I.	Apr. 25, 1888.
T. B. Dallas	Treas. Phœnix Cotton Mills Treas. Dallas Manufg. Co.	Box 386, Nashville, Tenn.	Oct. 24, 1895.
Philip Dana	Supt. Dana Warp Mills	Westbrook, Me.	Sept. 29, 1898.
Woodbury K. Dana	Treas. Dana Warp Mills	Westbrook, Me.	Apr. 25, 1888.
Albert W. Danforth	Supt. & Engineer Shanghai Cot. Cloth Mills, Shanghai, China	881 Bridge St., Lowell, Mass.	Apr. 27, 1881.
A. Lockwood Danielson	Asst. Treas. Quinebaug Co.,	Box 900, Providence, R. I.	Sept. 27, 1894.
J. DeForest Danielson	Asst. Treas. Lockwood Co. & Lewiston Bleachery & Dye Works	Providence, R. I.	Sept. 27, 1894.
John W. Danielson	Treas. Lockwood Co. and Ponemah Mills	Box 900, Providence, R. I.	Jan. 15, 1868.
B. D. Davol	Pres. Barnard Mfg. Co.	P. O. Box 418, Fall River, Mass.	Apr. 25, 1877.
James C. Deane	Supt. Griswoldville Manufg. Co.	Griswoldville, Mass.	Apr. 25, 1894.
Augustus De Cort	Treas. Beacon Mfg. Co.,	P. O. Box 2815 Boston, Mass.	Apr. 26, 1900.
George DeForest	Treas. Utica Steam Cotton Mills	Utica, New York	Oct. 27, 1897.
William P. Dempsey	Treas. Dempsey Bleachery and Dye Works,	Pawtucket, R. I.	Apr. 28, 1886.
Charles W. Dennett	Agt. Johnson Manufg. Co. Agt. and Treas. Dunbar Mills Co.	North Adams, Mass.	Oct. 29, 1890.

Edward P. Dennis	Lowell Machine Shop	Lowell, Mass.	Apr. 25, 1888.
Charles A. Denny	Pres. American Card Clothing Co.	Leicester, Mass.	Apr. 25, 1888.
P. Y. DeNormandie	Pepperell Mfg. Co.	30 Kilby St., Boston, Mass.	Apr. 29, 1896.
Charles Owen Dexter	Mgr. Canadian Col'd Cotton Mills Co. Ltd.	Hamilton, Ont., Can.	Apr. 24, 1895.
Lewis Dexter, Jr.	Mgr. The Canadian Colored Cotton Mills Co., Ltd.	Milltown, N. B.	Apr. 27, 1899.
Samuel Dibble	Pres. Enterprise Cotton Mills,	Orangeburg, S. C.	Sept. 29, 1898.
John W. Dickinson	Supt. Lyman Mills	Holyoke, Mass.	Oct. 27, 1897.
F. Dilling	Pres. Dilling Cotton Mills	Kings Mountain, N. C.	Oct. 24, 1895.
Albert W. Dimick	Supt. Fisher Mfg. Co.	Fisherville, Mass.	Apr. 25, 1894.
Bradford C. Divine	Supt. and Mgr. Utica Willow Vale Bleaching Co.	Chadwicks, N. Y.	Apr. 27, 1899.
Eben S. Draper	Agt. Draper Co.	Hopedale, Mass.	Oct. 31, 1888.
George A. Draper	Treas. Draper Co.	Hopedale, Mass.	Oct. 31, 1888.
George Otis Draper	Sec'y Draper Co.	Hopedale, Mass.	Apr. 24, 1895.
William F. Draper	Pres. Draper Co.	Hopedale, Mass.	July 17, 1867.
William F. Draper, Jr.	Draper Co.	Hopedale, Mass.	Oct. 29, 1890.
T. C. Duncan	Pres. and Treas. Union Cotton Mills	Union, S. C.	Apr. 26, 1900.
Joseph M. Dunham	43 Edwards St.,	Springfield, Mass.	Oct. 26, 1892.
Frank H. Dwelly	Treas. Tecumseh Mills	Fall River, Mass.	Apr. 27, 1899.
David H. Dyer	D. H. Dyer & Son, Mill Engineers 6, 7 and 8 Pocassett Bank Building,	Fall River, Mass.	Oct. 18, 1871.
William A. Eastman	Treas. Lowell Hosiery Co.	Lowell, Mass.	Apr. 24, 1878.
Russell W. Eaton	Agt. Cabot Manufg. Co.	Brunswick, Me.	Oct. 26, 1887.
John Eccles	Agt. Ponemah Mills	Taftville, Conn.	Apr. 27, 1892.
Lawrence V. Elder	Man. Dir. Galveston City Cotton Mills 212 Tremont St.,	Galveston, Texas	Oct. 27, 1886.
Oscar Elsas	Vice-Pres. Fulton Bag & Cotton Mills, P. O. Box 773,	Atlanta, Ga.	Apr. 28, 1897.
Frederick W. Ely	Agt. Columbian Manufg. Co.	Greenville, N. H.	Apr. 25, 1888.
Charles Estes	Pres. John P. King Mfg. Co.	Augusta, Ga.	Apr. 26, 1900.
H. B. Estes	Agt. Continental Mills	Lewiston, Me.	Apr. 26, 1893.
William Evans	Supt. Richard Borden Mfg. Co.	Fall River, Mass.	Apr. 29, 1896.
Herbert R. Farnum	Supt. Bernon Mills	Georgiaville, R. I.	Apr. 27, 1881.
Charles F. Farrar	Supt. Delaware Cotton Co., Box 467,	Wilmington, Del.	Oct. 27, 1897.
George E. Farrell	Treas. Utica Spinning Co.	Utica, N. Y.	Oct. 18, 1900.
James T. Ferguson	Supt. Boott Mills	Lowell, Mass.	Oct. 5, 1899.
Frank S. Field	Supt. & Agt. Massaemit Yarn Mills	Shattuckville, Mass.	Oct. 24, 1895.
William Firth	Pres. American Moistening Co. P. O. Box 1460, 150 Devonshire St., Room 67,	Boston, Mass.	Apr. 25, 1888.
Charles H. Fish	Agt. Cocheco Manufg. Co.	Dover, N. H.	Apr. 27, 1887.
Henry E. Fisher	Vice-Pres. & Agt. Atlanta Cotton Mills	Atlanta, Ga.	Oct. 24, 1895.

Herbert Fisher		Taunton, Mass.	Oct. 29, 1879.
William B. Fitz	Agt. W. Boylston Mfg. Co.	Easthampton, Mass.	Oct. 26, 1892.
Frederick A. Flather	Mech. Engineer & Foreman Lowell Machine Shop	Lowell, Mass.	Apr. 29, 1891.
F. C. Fletcher	Vice Pres. Lawton Spinning Co. 621 Banigan Building,	Providence, R. I.	Oct. 18, 1900.
M. F. Foster		Milford, N. H.	Apr. 17, 1872.
Philip H. Fowler		Gloucester City, N. J.	Nov. 30, 1881.
Edward W. France	Dir. of Philadelphia Textile School, N. W. Cor. Broad and Pine Sts.,	Philadelphia, Pa.	Sept. 22, 1896.
Arthur C. Freeman	Supt. Clear Water Bleachery and Mfg. Co. Box 208,	Augusta, Ga.	Apr. 27, 1899
John W. Fries	F. & H. Fries	Winston-Salem, N. C.	Oct. 18, 1900.
C. H. Frisbie	Agt. Attawaugan Co.	Norwich, Conn.	Oct. 29, 1890.
W. T. Galey	Pres. Aberfoyle Manufg. Co.	Chester, Pa.	Apr. 28, 1897.
William Gammell	Agt. Berkeley Co.	Providence, R. I.	Oct. 28, 1885.
James G. Garland	10 Adams St.	Biddeford, Me.	Oct. 29, 1879.
Edward T. Garsed	Treas. Hucomuga Mills	Greensboro, N. C.	Apr. 28, 1898.
Joshua Garsed	Wingohocking Mills and National Spinning Co., Frankford	Philadelphia, Pa.	Oct. 27, 1897.
James A. Gary	Alberton Mills . 108 W. German St.,	Baltimore, Md.	Apr. 25, 1883.
James Gee	Supt. Interlaken Dye Works	Fiskville, R. I.	Apr. 28, 1898.
Charles E. Getchell	Supt. Waltham Bleachery and Dye Works P. O. Box 62, 35 Willow St.,	Waltham, Mass.	Oct. 30, 1889.
Daniel Gilligan	Supt. Pocasset and Metacomet Mills,	Fall River, Mass.	Apr. 29, 1896.
William C. Godfrey	Agt. Indian Orchard Co.	Indian Orchard, Mass.	Oct. 29, 1890.
Alfred M. Goodale	Treas. Boston Manufg. Co. 50 State St.,	Boston, Mass.	Apr. 25, 1883.
Louis B. Goodall	Treas. Goodall Worsted Co.	Sanford, Me.	Oct. 5, 1899.
Frederick B. Gordon	Pres. and Gen. Mgr. Columbus Mfg Co.	Columbus, Ga.	Apr. 26, 1900.
Charles H. Gorton	Supt. Columbus Mfg. Co.	Columbus, Ga.	Apr. 25, 1894.
Marcellus Gould	Pres. and Mgr. N. H. Spinning Co.	Penacook, N. H.	Sept. 22, 1896.
George P. Grant, Jr.	Treas. Grant Yarn Co.	Fitchburg, Mass.	Sept. 27, 1894.
D. W. Gray	Supt. Skenandoa Cotton Co.	Utica, N. Y.	Oct. 26, 1892.
R. A. Gray	Supt. Rodman Manufg. Co.	Allenton, R. I.	Apr. 24, 1895.
Stephen Greene	Mill Architect and Engineer Lockwood, Green & Co. 93 Federal St.,	Boston, Mass.	Oct. 27, 1886.
William C. Greene	Treas. Peace Dale Manufg. Co.	Peace Dale, R. I.	Oct. 27, 1886.
Joseph Warren Greene	Supt. Hamilton Web Co.	Hamilton, R. I.	Apr. 29, 1896.
John T. Greenwood	R. Greenwood & Bault 4720 Leiper St.,	Frankford, Philadelphia, Pa.	Apr. 26, 1900.
S. Greenwood	Mgr. Canadian Col'd Cot. Mills Co. Ltd.	Cornwall, Ontario	Oct. 5, 1899.
John Gregson	Agt. Fiskdale Mills	Fiskdale, Mass.	Apr 24, 1895.
Maxwell Grierson	Gen. Mgr. Jas. Chadwick & Bro., Ltd.,	Jersey City, N. J.	Apr. 28, 1898.

Frederick Grinnell	Pres. Gen. Fire Extinguisher Co.	New Bedford, Mass.	Apr. 24, 1878.
David Grove	Supt. U. S. Cotton Co.	Central Falls, R. I.	Apr. 28, 1898.
H. S. Grove	Pres. Argo Mills Co., 218 Race St.,	Philadelphia, Pa.	Apr. 28, 1898.
Arthur H. Gulliver	Agt. Boston Mfg. Co.	Waltham, Mass.	Apr. 24, 1889.
B. F. Guy	Gen. Supt. Pelzer Manufg. Co.	Pelzer, S. C.	Apr. 24, 1895.
William J. Hadfield	225 Bailey St.,	Lawrence, Mass.	Apr. 27, 1899.
Effingham C. Haight	Treas. Wampanoag Mills	Fall River, Mass.	Apr. 27, 1899.
Frank J. Hale	Agt. Saco and Pettee Machine Shops	Newton Upper Falls, Mass.	Apr. 27, 1892.
William E. Hall	Treas. Shaw Stocking Co.	Lowell, Mass.	Apr. 27, 1892.
Z. D. Hall	Supt. Berkshire Cotton Mfg. Co. 70 Orchard St., P. O. Box 963,	Adams, Mass.	Oct. 29, 1879.
John H. Hambly	Treas. Quidnick Manufg. Co. 49 Westminster St.,	Providence, R. I.	Apr. 24, 1895.
Arthur M. Hamilton	Supt. Parker Mills . 362 Linden St.,	Fall River, Mass.	Apr. 28, 1897.
John F. Hamlet	P. O. Box 160	Fall River, Mass.	Oct. 31, 1888.
Joseph O. Hannum	Agt. Indian Head Mills of Alabama	Cordova, Ala.	Apr. 30, 1890.
Henry F. Harris	Treas. West Boylston Manufg. Co. 340 Main St.,	Worcester, Mass.	Apr. 30, 1890.
John J. Hart	Pres. and Gen. Mgr. Charlton Manufg. Co. P. O. Box 94,	Pawtucket, R. I.	Apr. 24, 1895.
William D. Hartshorne	Agt. Arlington Mills	Lawrence, Mass.	Apr. 27, 1899.
Samuel E. Hathaway	Supt. Fall River Iron Works Co.	Fall River, Mass.	Sept. 27, 1894.
William Hathaway	Supt. Barnard Manufg. Co.	Fall River, Mass.	Apr. 25, 1894.
William B. Hawes	108 Bedford St., P. O. Box 733,	Fall River, Mass.	Oct. 24, 1895.
Alfred Hawkesworth	Supt. Merchants' Cotton Co.	Montreal, P. Q.	Apr. 26, 1893.
Fred Hawkesworth	Asst. Supt. Merchants' Cotton Co.	Montreal, P. Q.	Sept. 22, 1896.
William Hayes	Agt. Barker Mill	Auburn, Me.	Apr. 30, 1879.
W. G. Henderson	Agt. Shetucket Co.	Norwich, Conn.	Apr. 29, 1896.
James G. Hill	Cotton Manufr., Merrimack House	Lowell, Mass.	Jan. 15, 1868.
William R. Hill	Treas. Glasgow Manufg. Co.	South Hadley Falls, Mass.	Oct. 25, 1893.
George H. Hills	Treas. Davol Mills & Stevens Mfg. Co.	Fall River. Mass.	Oct. 24, 1895.
Charles H. Hobbs	Agt. Thorndike Co.	Thorndike, Mass.	Apr. 28, 1886.
Franklin W. Hobbs	Asst. Treas. Arlington Mills P. O. Box 3590, 78 Chauncy St.,	Boston, Mass.	Apr. 27, 1899.
Louis L. Hohn	122 High St.,	Westerly, R. I.	Apr. 28, 1897.
Charles M. Holmes	Supt. Manchaug Co.	Manchaug, Mass.	Apr. 27, 1899.
Gideon F. Holmes	Treas. and Gen. Mgr. Plymouth Cordage Co.	No. Plymouth, Mass.	Oct. 30, 1889.
George W. Holt	Agt. Monohansett Manufg. Co.	Putnam, Conn.	Oct. 29, 1879.
Walter L. Holt	Pres. Holt-Morgan Mills	Fayetteville, N. C.	Oct. 18, 1900.
William P. Holt	Supt. Barnaby Mills	Fall River, Mass.	Oct. 25, 1893.
Thomas Horsfield	Overseer of Weaving, 95 Bonney St.,	New Bedford, Mass.	Oct. 27, 1897.

Henry S. Houghton, Jr. Supt. Paul Whitin Manufg. Co. . . Northbridge, Mass. . Apr. 24, 1895.
W. C. Houston . . . . Pres. Hope Mills Manufg. Co. . . . . .
. . . . . 333 Drexel Building, Philadelphia, Pa. . . Apr. 28, 1897.
Elisha H. Howard . . Treas. Harris Textile Co. . . . . .
. . . . . 309 Butler Exchange, Providence, R. I. . . Apr. 25, 1883.
Henry S. Howe . . . . Dry Goods Commission, 68 Chauncy St., Boston, Mass. . Oct. 31, 1877.
Albert C. Hoy . . . . Asst. Supt. Hamlet Mills . . . . . Woonsocket, R. I. . . Apr. 28, 1898.
W. S. Hume . . . . . Supt. Dominion Cotton Mills, Ltd. . . . . .
. . . . . 176 Notre Dame St., Hochelaga, P. Q., Can. Oct. 29, 1890.
A. W. Hunking . . . . Agt. Merrimack Mfg. Co., Southern Mill . . . . . .
. . . . . Huntsville, Ala. . . Apr. 24, 1895.

D. Edwin Irving . . . Treas. The Irving & Leiper Mfg. Co., Chester, Pa. . . . . Oct. 27, 1897.

J. E. Jenckes . . . . . Treas. E. Jenckes Manufg. Co. . . Pawtucket, R. I. . . Apr. 24, 1895.
Edward B. Jennings . . Agt. N. E. Cotton Yarn Co. (Globe Dept.) . . . . . .
. . . . . Fall River, Mass. . . Sept. 29, 1898.
David L. Jewell . . . Agt. China, Webster & Pembroke Mills . Suncook, N. H. . Apr. 20, 1865.
David S. Johnston . . Treas. Cohoes Iron Foundry & Mach. Co., Cohoes, N. Y. . Oct. 28, 1891.
W. T. Jordan . . . . Mgr. Mountain Island Mfg. Co. . . Mountain Island, N. C. Oct. 24, 1895.

Frank E. Kaley . . . . Treas. Morse & Kaley Mfg. Co. . . Milford, N. H. . . . Oct. 24, 1895.
W. E. Keach . . . . . Supt. Grant Yarn Co. . 123 Myrtle Ave., Fitchburg, Mass. Oct. 26, 1892.
Roland R. Kelly . . . Supt. Williamstown Manufg. Co. . Williamstown Sta., Mass. Nov. 30, 1881.
George E. Kent . . . . Treas. Exeter Manufg. Co. . . . . Pittsfield, N. H. . . Oct. 31, 1888.
Hervey Kent . . . . . Pres. Exeter Manufg. Co. . . . . Exeter, N. H. . . . Apr. 20, 1865.
Nathaniel B. Kerr . . . Agt. Boott Cotton Mills . . . . . Lowell, Mass. . . . Oct. 26, 1892.
John Kilburn . . . . . Belmont, Mass. . . . Apr. 20, 1865.
Harry W. Kimball . . . . . Bath, Me., ... Oct. 24, 1895.
Benjamin B. Kirk . . . Supt. Fall River Iron Works Co. . . Fall River, Mass. . . Apr. 28, 1897.
Albert Knight . . . . Supt. Quidnick Mills . . . . . Quidnick, R. I. . . . Apr. 24, 1895.
Albert F. Knight . . . . . 39 Main St., Woonsocket, R. I. . . Oct. 27, 1886.
C. Prescott Knight . . Pres. River Point Corp. . . . . River Point, R. I. . . Sept. 29, 1898.
Jesse A. Knight . . . . Sec'y & Supt. Lawton Spinning Co. Providence, R. I. . . Oct. 26, 1892.
Stephen A. Knight . . Pres. and Agt. Hebron Manufg. Co. . . . . .
. . . . . Box 820, Providence, R. I. . . Oct. 21, 1868.
Walter B. Knight . . . Reynolds Manufg. Co. . . . . Davisville, R. I. . . Apr. 24, 1889.
Webster Knight . . . Pres. Natick Mills 3 Washington Row, Providence, R. I. . . Sept. 29, 1898.

Fred Lacey . . . . . Mgr. Montreal Cotton Co. . . Valleyfield, P. Q. . . . . Apr. 24, 1895.
William T. Lang . . . Agt. Brookside Mills . . . . . Knoxville, Tenn. . . Apr. 28, 1897.
Walter H. Langshaw . Agt. Dartmouth Manufg. Corp. . . New Bedford, Mass. . Apr. 29, 1896.
Elliott Cowdin Lambert Supt. Amoskeag Manufg. Co. . . . Manchester, N. H. . Oct. 24, 1895.

George H. Law	Supt. Merchants' Mfg. Co.	815 Walnut St., Fall River, Mass.	Apr. 28, 1897.
Abbott F. Lawrence	Treas. Winthrop Cotton Yarn Co	Box 848, Taunton, Mass.	Apr. 24, 1895.
Harold Lawton	Gen. Mgr. Warwick Mills	Centreville, R. I. and 9 Arch St., Providence, R. I.	Oct. 27, 1886.
Evan Arthur Leigh	Textile Machinery	70 Kilby St., Boston, Mass.	Oct. 29, 1890.
John Leiper	Supt. Fitchburg Worsted Mills, Upland Road	171 Blossom St., Fitchburg, Mass.	Oct. 27, 1897.
J. Colby Lewis	Supt. Vesta Cotton Mills	Charleston, S. C.	Oct. 26, 1892.
Leontine Lincoln	Pres. Seaconnet Mills	Fall River, Mass.	Apr. 28, 1897.
B. F. G. Linnell		P. O. Box 645, Central Falls, R. I.	Oct. 27, 1897.
Charles Warren Lippitt,	Treas. Silver Spring B. & D. Co.	Providence, R. I.	Oct. 30, 1878.
Henry F. Lippitt	Agt. Social and Manville Cos.	Providence, R. I.	Apr. 27, 1881.
William H. Loftus	Supt. Clark Thread Co.	Newark, N. J.	Oct. 27, 1897.
Robert W. Lord	Agt. R. W. Lord & Co.	Kennebunk, Me.	Oct. 20, 1869.
Ernest Lovering	Agt. Lyman Mills	Holyoke, Mass.	Apr. 25, 1888.
Henry M. Lovering	Agt. Whittenton Manufg. Co.	Taunton, Mass.	Oct. 27, 1880.
William C. Lovering	Pres. Whittenton Mfg. Co.,	40 Water St., Boston, Mass.	Oct. 25, 1876.
William M. Lovering	Supt. Whittenton Manufg. Co.	Taunton, Mass.	Sept. 27, 1894.
Arthur H. Lowe	Treas. Parkhill Manufg. Co.	Fitchburg, Mass.	Oct. 30, 1889.
David Lowe	Asst. Supt. Parkhill Manufg. Co.	Fitchburg, Mass.	Apr. 24, 1895.
Dudley T. Lyall	Asst. Mgr. Brighton Mills	541 W. 23d St., N. Y.	Sept. 22, 1896.
William L. Lyall	Supt. J. & W. Lyall Loom and Machine Works and Sec. Brighton Mills	540 W. 23d St., New York City	Oct. 26, 1892.
Herbert Lyman		Box 1717, Boston, Mass.	Oct. 24, 1895.
Otis G. Lynch	Supt. Enterprise Manufg. Co.	Augusta, Ga.	Oct. 24, 1895.
Alvin S. Lyon	Supt. Bigelow Co.	Lowell, Mass.	Apr. 26, 1882.
James R. MacColl	Treas. Lorraine Manufg. Co.	Pawtucket, R. I.	Apr. 24, 1895
Charles L. Macomber	Pres. Winthrop Cotton Yarn Co.	Taunton, Mass.	Apr. 24, 1895.
Amos G. Maddox	Supt. Linwood Mill	Linwood, Mass.	Oct. 18, 1900.
Charles T. Main	Mech. and Mill Engineer Dean & Main	53 State St., 1112 Exchange Bldg., Boston, Mass.	Oct. 28, 1885.
Charles R. Makepeace	Mill Engineer	Box 973, Providence, R. I.	Apr. 30, 1890.
A. T. Malcolmson	Agt. C. Bischoff & Co.	19 George St., Box 1104, Providence, R. I.	Oct. 27, 1897.
Arthur B. Mann	J. H. Martin & Co.,	Box 465, 99 Franklin St., New York	Apr. 25, 1894.
Charles H. Manning	Supt. Amoskeag Manufg. Co.	Manchester, N. H.	Oct. 28, 1885.
Henry F. Mansfield	Gen. Supt. Utica Steam Cotton Mills and Mohawk Valley Cotton Mills	Utica, N. Y.	Apr. 30, 1890.
Paul J. Marrs	Treas. Henderson Cotton Mills	Henderson, Ky.	Oct. 27, 1897.
Albert G. Martin	Supt. Kincaid Manufg. Co.	Box 182, Griffin, Spalding County, Ga.	Apr. 30, 1884.
Henry D. Martin	Supt. Courtenay Mfg. Co.,	Newry, P. O. Oconee Co., S. C.	Apr. 28, 1897.
John R. Mason	Supt. Harmony Mills	237 Main St., Cohoes, N. Y.	Apr. 28, 1897.

Philip A. Mathewson	Supt. King Philip Mills	Box 607, Fall River, Mass.	Apr. 24, 1895.
Thomas Mayor	Textile Machinery	Thomas Mayor & Son, 26 Olney St., Providence, R. I.	Oct. 27, 1880.
Robert McArthur	Agt. Pepperell Mfg. Co.	Biddeford, Me.	Apr. 17, 1872.
Thos. McAuliffe	Supt. Stevens Mfg. Co.	Fall River, Mass.	Apr. 28, 1898.
Charles D. McDuffie	Agt. Manchester Mills	Manchester, N. H.	Apr. 21, 1869.
Fred C. McDuffie	Treas. Everett Mills and York Manufg. Co.	P. O. Box 2934, 40 Water St., Boston, Mass.	Oct. 25, 1882.
William G. McLoon	Supt. Lancaster Mills,	Clinton, Mass.	Apr. 27, 1892.
William P. McMullan	Agt. Naumkeag Steam Cotton Co.	Salem, Mass.	Sept. 27, 1894.
John Tempest Meats	Gen. Supt. Mason Machine Works	Taunton, Mass.	Apr. 27, 1887.
Henry P. Meikleham,	Supt. Aiken Mfg. Co.	Bath, S. C.	Apr. 26, 1900.
Charles H. Merriman, Jr.	Supt. Social Mfg. Co.	Woonsocket, R. I.	Apr. 24, 1895.
Frank M. Messenger	Agt. Grosvenor Dale Co.	No. Grosvenor Dale, Conn.	Apr. 27, 1887.
W. H. Miles	Agt. Farwell Mills	Lisbon, Me.	Sept. 22, 1896.
R. M. Miller, Jr.		Charlotte, N. C.	Sept. 29, 1898.
James I. Milliken	Agt. Everett Mills	Lawrence, Mass.	Oct. 26, 1892.
Roscoe S. Milliken	Supt. Nashua Mfg. Co.	Nashua, N. H.	Apr. 29, 1896.
David Milne	C. J. Milne & Sons	Washington Ave. & 11th St., Philadelphia, Pa.	Apr. 28, 1897.
A. B. Mole	Mgr. Greylock Mill	Adams, Mass.	Apr. 24, 1895.
Edward A. Mongeon	Supt. Lonsdale Cos. Mills	Lonsdale, R. I.	Apr. 24, 1895.
J. R. Montgomery	Pres. The J. R. Montgomery Co.	Windsor Locks, Conn.	Sept. 29, 1898.
George A. Moody	Supt. West Warren Cotton Mills	West Warren, Mass.	Apr. 27, 1899.
James Sumter Moore	Sec. and Treas. Olympia & Richland Cotton Mills	Columbia, S. C.	Apr. 26, 1900.
Fred W. Moore	Agt. Cordis Mills	P. O. Box 582, Millbury, Mass.	Apr. 27, 1892.
Albert H. Morton	Supt. Kitson Machine Co.	Lowell, Mass.	Oct. 28, 1891.
Oliver H. Moulton	Supt. Hamilton Manufg. Co.	Lowell, Mass.	Apr. 20, 1865.
Farquharson J. Muir	Supt. Canadian Col'd Cot. Mills Co., Ltd., St. Croix Mill	Milltown, N. B., Can.	Apr. 27, 1892.
Roscius C. Newell	Supt. Palmer Mill	Three Rivers, Mass.	Oct. 24, 1895.
William G. Nichols	Sec. and Treas. Springstein Mills	Chester, S. C.	Oct. 25, 1893.
William M. Nixon	Pres. Atlanta Woolen Mills	Atlanta, Ga.	Oct. 5, 1899.
Franklin Nourse	Agt. Lawrence Manufg. Co.	Lowell, Mass.	Apr. 24, 1878.
S. Odenheimer	Treas. Lane Mills	New Orleans, La.	Oct. 25, 1893.
Charles K. Oliver	Treas. Mt. Vernon-Woodberry Cotton Duck Co.	346-8 Equitable Bld., Baltimore, Md.	Sept. 27, 1894.
J. Edward Osborn	Treas. American Linen Co.	Fall River, Mass.	Apr. 28, 1897.
Herbert W. Owen	Asst. Supt. Merchants' Mfg. Co.	Fall River, Mass.	Oct. 5, 1899.
Oscar L. Owen	Mech. and Mill Eng. Whitin Machine Works	Whitinsville, Mass.	Apr. 25, 1894.

Elmer E. Page	Agt. York Manufg. Co.	Saco, Me.	Apr. 27, 1892.
Francis J. Parker	Treas. Monadnock Mills, 81 Milk St.,	Boston, Mass.	Jan. 15, 1868.
O. B. Parker		Central Falls, R. I.	Apr. 24, 1895.
Samuel L. Parker	Supt. Turners Falls Cotton Mills	Box 627, Turners Falls, Mass.	Apr. 29, 1896.
Walter E. Parker	Agt. Pacific Mills, 217 Haverhill St.,	Lawrence, Mass.	Apr. 25, 1877.
John H. Parks	Pres. Wm. Parks & Son, Ltd.	St. John, N. B.	Apr. 24, 1878.
Duncan D. Parmly	Treas. Johnson Mfg. Co. and Dunbar Mills Co.	49 Wall St., New York, N. Y.	Sept. 22, 1896.
Samuel F. Patterson	Pres. and Treas. Thistle Mills Co.	Ilchester, Md.	Oct. 18, 1900.
John W. Pead	Agt. Merrimack Manufg. Co.	Box 1231, Lowell, Mass.	Apr. 26, 1893.
James R. Pearce	Supt. Fulton Bag and Cotton Mills	Atlanta, Ga.	Oct. 24, 1895.
William C. Peirce	Pres. Elizabeth Mills,	564 Eddy St., Providence, R. I.	Apr. 24, 1895.
William D. Pennell	Agt. Hill Manufg. Co.	Lewiston, Me.	Apr. 16, 1873.
Haven C. Perham	Treas. Kitson Machine Co.	Lowell, Mass.	Apr. 30, 1879.
Henry C. Phillips	Supt. Atlantic Cotton Mills	Lawrence, Mass.	Apr. 25, 1894.
Benjamin Phipps	Treas. Clarendon Mills	4 Winthrop Sq. Boston, Mass.	Sept. 29, 1898.
Albert R. Pierce	Supt. Pierce Mfg. Corp.	New Bedford, Mass.	Oct. 5, 1899.
Andrew G. Pierce, Jr.	Treas. Rotch Spinning Co. Treas. Pierce Manufg. Corp. Treas. Howland Mills Corp.	P. O. Box, 34, New Bedford, Mass.	Apr. 24, 1895.
Reuben Pilling, Jr.		30 Hudson St., Providence, R. I.	Apr. 29, 1896.
Charles H. Plummer	Agt. Great Falls Manufg. Co.	Somersworth, N. H.	Apr. 25, 1888.
Charles T. Plunkett	Sec. Berkshire Cotton Mfg. Co.	Adams, Mass.	Apr. 28, 1897.
Joseph H. Potter, Jr.	Supt. Durfee Mills	Fall River, Mass.	Apr. 27, 1899.
J. F. Powers	Supt. Eagle Mill	North Adams, Mass.	Oct. 5, 1899.
Herbert L. Pratt	Agt. Bates Manufg. Co.	Lewiston, Me.	Oct. 27, 1875.
T. W. Pratt	Pres. West Huntsville Cotton Mill Co.	Huntsville, Ala.	Sept. 22, 1896.
John E. Prest	Gen. Supt. Harmony Mills	Cohoes, N. Y.	Apr. 17, 1872.
M. W. Quinn	Agt. Hamilton Woolen Co.	Amesbury, Mass.	Oct. 27, 1886.
T. G. Ramsdell	Agt. Monument Mills	Housatonic, Mass.	Oct. 30, 1878.
Emory S. Rathbun	Supt. Pequot Mills	Montville, Conn.	Apr. 27, 1899.
M. A. Rawlinson	Supt. Tremont and Suffolk Mills	Lowell, Mass.	Apr. 24, 1895.
John F. Reardon	Agt. Falls Co.	Norwich, Conn.	Apr. 26, 1900.
Robert Redford	Mfr.	Box 28, Lawrence, Mass.	Apr. 26, 1882.
R. S. Reinhardt	Treas. and Mgr. Elm Grove Cotton Mills	Lincolnton, N. C.	Apr. 28, 1898.
L. B. Renfrew	Treas. Renfrew Mfg. Co.	Adams, Mass.	Oct. 5, 1899.
T. H. Rennie	Supt. Graniteville Mfg. Co.	Graniteville, S. C.	Oct. 18, 1900.
Frederick W. Reynolds	Supt. Potomska Mills	Box 299, New Bedford, Mass.	Apr. 26, 1900.
Roscoe C. Reynolds		Lewiston, Me.	Oct. 25, 1876.
F. H. Rice	394 Pleasant St.,	Worcester, Mass.	Apr. 28, 1880.
Charles H. Richardson	Agt. Lancaster Mills	Clinton, Mass.	Apr. 24, 1889.

W. H. Richmond . . . Supt. Bibb Mill No. 2 . . . . . Macon, Ga. . . . . Oct. 27, 1897.
Walter Rigby . . . . Supt. Ballou Yarn Converting Co. . . . . 189 Charles St., Providence, R. I. . . Apr. 26, 1900.
Charles E. Riley . . . Textile Machinery . . . . . Box 2815 . . . . . 281 Congress St., Boston, Mass. . . . Apr. 25, 1888.
William H. Ritter . . . Gen. Supt. Johnson & Johnson . . . New Brunswick, N. J. Apr. 26, 1900.
George W. Robbins . . Supt. White Valley Mills Smithville, Barre, Mass. . . . . Apr. 28, 1897.
Benj. H. Roberts . . . General Mill Supplies 163 Grove St., Fall River, Mass. . . Apr. 26, 1900.
Charles D. Robinson . Supt. Crompton Co. . . . . Crompton, R. I. . . . Sept. 27, 1894.
Edwin A. Robinson . . Asst. Supt. Tremont and Suffolk Mills Lowell, Mass. . . . . Oct. 18, 1900.
William A. Robinson . Asst. Supt. Social Manufg. Co. . . . Woonsocket, R. I. . Apr. 29, 1896.
W. H. Rose . . . . . Treas. Granby Cotton Mills . . . . Columbia, S. C. . . . Oct. 18, 1900.
John R. Rostron . . . Overseer of Carding, Lancaster Mills, Clinton, Mass. . . . Sept. 29, 1898.
John K. Russell . . Care A. W. Brainerd, Gen. Mgr. May's Landing Water Co. and Millville Manufg. Co. . . . . Millville, N. J. . . . Apr. 29, 1891.

Edward H. Sanborn . . Vice Pres. Cold Spring Bleaching and Finishing Works . . . . . 48-51 The Bourse, Philadelphia, Pa. . . Oct. 18, 1900.
Arnold B. Sanford . Pres. and Mgr. American Cotton Yarn Exchange . . . . . 67 Chauncy St., Boston, Mass. . . . Oct. 25, 1882.
J. Herbert Sawyer . . Care H. B. Sawyer, 4 P. O. Square, Boston, Mass. . . . July 19, 1865.
F. C. Sayles . . . . . Pres. Baltic Power Co. . . . . 304 Banigan Building, Providence, R. I. . . Oct. 27, 1897.
George H. Sayward . . Gen. Mgr. Standard Yarn Co. . . . Oswego, N. Y. . . . Oct. 29, 1890.
Arnold Schaer . . . . Supt. Warren Manufg. Co. . . . . Warren, R. I. . . . Apr. 24, 1895.
Theodore C. Search . . Pres. Cold Spring Bleaching and Finishing Works . . . . . 32 South Broad St., Philadelphia, Pa. . . Oct. 18, 1900.
Charles M. Sears . . . West Point Mfg. Co. . . . . Langdale, Ala. . . . Apr. 28, 1898.
George H. Shapley . . Treas. Silver Lake Co., 78 Chauncy St., Boston, Mass. . . . Apr. 29, 1896.
Frank P. Sheldon . . . Mill Engineer, Industrial Trust Bldg. Providence, R. I. . . Apr. 25, 1894.
Thomas C. Sheldon . . Agt. Fitchburg Duck Mills . . . . . 8 School St., Fitchburg, Mass. . . Oct. 29, 1884.
Willis S. Shepard . . . Pres. American Net and Twine Co. . Canton, Mass. . . . Apr. 29, 1896.
William F. Sherman . . Mill Engineer . . . . . 107 New Brazer Bldg., 27 State St., Boston, Mass. . . . Apr. 15, 1874.
Charles M. Shove . . . Treas. Granite Mills . . . Box 45, Fall River, Mass. . . Oct. 27, 1875.
Herbert H. Shumway . Treas. and Agt. Corr Manufg. Co. . Taunton, Mass. . . . Apr. 26, 1893.
Francis H. Silsbee . . Supt. Cotton Dept. Pacific Mills . . Lawrence, Mass. . . Apr. 27, 1887.
Nathaniel G. Simonds . Treas. Naumkeag Steam Cotton Co., Salem, Mass. . . . . Apr. 28, 1898.
Louis Simpson . . . . . Victoria Chambers, Ottawa, Ont. . . . . Apr. 24, 1895.
Abbott E. Slade . . . . . 863 High St., Fall River, Mass. . . Oct. 25, 1893.
Arthur T. Smith . . { Supt. Langley Manufg Co. . . . / Supt. Aiken Manufg. Co. . . . . } Langley, S. C. . . . Oct. 24, 1895.
Joel Smith . . . . . Supt. The J. P. King Manufg. Co. . Augusta, Ga. . . . . Oct. 24, 1895.
J. C. Smith . . . . . Supt. Chace Mills . . . . . Fall River, Mass. . . Oct. 27, 1897.
James Herbert Smith . Supt. Quinebaug Mills . . . . . Danielson, Conn. . . Apr. 28, 1898.

Thomas Henry Smith	Jamestown Cotton Mill	Jamestown, N. Y.	Apr. 26, 1900.
Ellison A. Smyth	Pres. Pelzer Manufg. Co.	Pelzer, S. C.	Oct. 26, 1892.
William S. Southworth	Agt. Mass. Cotton Mills	Box 1230, Lowell, Mass.	Oct. 31, 1888.
S. S. Spencer	Supt. Conestogo Steam Mills	Lancaster, Pa.	Oct. 25, 1876.
Wilton H. Spencer	Textile Manuf.,	3 Exchange Pl., Providence, R. I.	Apr. 28, 1898.
George E. Spofford	Supt. Blackstone Mfg. Co.	Blackstone, Mass.	Apr. 29, 1896.
Henry B. Sprague	Treas. Boston Woven Hose and Rubber Co.	Cambridgeport, Mass.	Oct. 5, 1899.
Leroy Springs	Pres. Lancaster Cotton Mills	Lancaster, S. C.	Oct. 24, 1895.
George R. Stearns	Pres. Riverside Mills	Augusta, Ga.	Apr. 30, 1890.
T. B. Stevenson	Supt. Readville Cotton Mill	Hyde Park, Mass.	Apr. 26, 1900.
Robert Stewart	Supt. Hamlet Textile Co.	Woonsocket, R. I.	Apr. 27, 1899.
Walter F. Stiles	Treas. Orswell Mills	Fitchburg, Mass.	Oct. 24, 1895.
O. W. Stites	Gen. Mgr. Commonwealth Cotton Mfg. Co.	Durham, N. C.	Oct. 24, 1895.
Herman F. Straw	Agt. Amoskeag Manufg. Co.	Manchester, N. H.	Oct. 28, 1885.
John Sullivan	Supt. Union Cotton Mfg. Co.	Fall River, Mass.	Apr. 27, 1899.
Timothy Sullivan	Supt. Davol Mills	Fall River, Mass.	Apr. 27, 1899.
Walter H. Summersby	Supt. Pontiac Mill and Bleachery	Pontiac, R. I.	Oct. 25, 1893.
D. G. Sunderland	Treas. The Pelham Mills	Pelham, S. C.	Oct. 18, 1900.
James O. Sweet	Agt. and Treas. Ashland Cotton Co.	Jewett City, Conn.	Apr. 28, 1886.
Robert Rennie Taft		P. O. Box 1443, Providence, R. I.	Apr. 24, 1895.
Robert W. Taft	Treas. Coventry Co.	Box 1144, Providence, R. I.	Sept. 27, 1894.
George P. Taylor	Treas. Danielsonville Cotton Co. of Danielson, Conn.	Clinton, Mass.	Oct. 27, 1880.
James W. Taylor	Agt. and Supt. Canoe River Mills	Box 46, Taunton, Mass.	Oct. 26, 1892.
W. Marshall Taylor	Supt. Merrick Thread Co.	34 Arlington St., Holyoke, Mass.	Sept. 22, 1896.
Richard Thackeray	Supt. Weetamoe Mills	Fall River, Mass.	Apr. 29, 1885.
Earl A. Thissell	Gen. Mgr. Woonsocket Bobbin Co.	Woonsocket, R. I.	Oct. 30, 1878.
Ariel C. Thomas	Agt. Saratoga Victory Mfg. Co.	Victory Mills, Saratoga Co., N. Y.	Oct. 31, 1888.
Charles E. Thomas	Treas. Forestdale Manufg. Co.	44 Prospect St., Woonsocket, R. I.	Oct. 31, 1883.
Edward W. Thomas	Agt. Tremont and Suffolk Mills	166 Pawtucket St., Lowell, Mass.	Apr. 30, 1884.
Ralph E. Thomson	Supt. Parkhill Manufg. Co., Mill C.	Fitchburg, Mass.	Apr. 25, 1894.
D. M. Thompson	Gen. Mgr. B. B. and R. Knight's Mills	Box 1442, Providence, R. I.	Oct. 28, 1885.
James O. Thompson, Jr.	Supt. Wamsutta Mills	New Bedford, Mass.	Oct. 18, 1900.
Joseph S. Tidd	Treas. and Agt. Oakland Mills	Taunton, Mass.	Apr. 27, 1899.
Horace W. Tinkham	Treas. and Agt. Robeson Mills	Fall River, Mass.	Apr. 27, 1899.
W. O. Todd	Sec. and Treas. Lawton Spinning Co.	621 Banigan Building, Providence, R. I.	Oct. 18, 1900.

James P. Tolman . . . Pres. Samson Cordage Works . . . . . .
. . . . . 115 Congress St., Boston, Mass. . . . Oct. 29, 1890.
D. A. Tompkins . . . Engineer and Contractor The D. A. Tompkins Co. . . .
. . . . . Charlotte, N. C. . . . Oct. 24, 1895.
George W. Towne . . . Supt. Cotton Dept. Arlington Mills . Lawrence, Mass. . . Oct. 26, 1892.
Robert B. Treat . . . . Centerville Cotton Mills . . . . . Centerville, R. I. . . Sept. 27, 1894.
C. H. Truesdell . . . . Supt. Attawaugan Co. . . . . Killingly, Conn. . . . Oct. 29, 1884.
Edmund E. Truesdell . Supt. China, Webster & Pembroke Mills . Suncook, N. H. . Apr. 26, 1876.
Oscar B. Truesdell . . . . . 18 Washington Terrace, Newtonville, Mass. . Oct. 15, 1873.
George F. Tryon . . . Supt. Conanicut Mills, 199 Purchase St., Fall River, Mass. . Apr. 28, 1897.
George E. Tucker . . . Agt. Otis Co. . . . . Ware, Mass. . . . . Oct. 24, 1895.
Philip S. Tuley . . . Pres. and Treas. Louisville Cotton Mills Co. . . . . .
. . . . . Louisville, Ky. . . . Oct. 18, 1900.
Charles D. Turnbull . . Treas. Wm. A. Slater Mills Corp. . . . . .
. . . . . The Ludlow, Boston Mass. . . . . Oct. 27, 1897.
George W. Turner . . Supt. Argo Mills . . . . . Gloucester, N. J. . . Apr. 26, 1900.
William D. Twiss . . . Supt. Everett Mills . . . . . Lawrence, Mass. . . April 29, 1896.

Charles T. Upton . . . . . 63 Mt. Vernon St., Lowell, Mass. . . . Apr. 28, 1897.

George A. Vaughan . . Supt. The Putnam Manufg. Co. . . Putnam, Conn. . . . Sept. 22, 1896.
William P. Vaughan . Agt. Putnam Manufacturing Co. . . . . .
. . . . . Banigan Building, Providence, R. I. . . Sept. 29, 1898.
Eugene F. Verdery . . Pres. and Treas. Warren Mfg. Co. . Augusta, Ga. . . . . Apr. 26, 1900.
James P. Verdery . . . Pres. Enterprise Mfg. Co. . . . . Augusta, Ga. . . . . Apr. 26, 1900.
Frank P. Vogl . . . . Agt. Monadnock Mills . . . . . Claremont, N. H. . . Sept. 27, 1894.

Jude C. Wadleigh . . . Supt. Mass. Cotton Mills . . . . . Lowell, Mass. . . . Oct. 26, 1892.
Herbert E. Walmsley . Agt. Wamsutta Mills . . . . . New Bedford, Mass. . Oct. 29, 1890.
Robinson Walmsley . . Supt. Tecumseh Mills, P. O. Box 246, Fall River, Mass. . . Apr. 27, 1899.
Frederick T. Walsh . . Agt. Thomas Leyland & Co. . . . . .
. . . . . 53 India St., Boston, Mass. . . . Apr. 28, 1897.
James A. Walsh . . . Agt. Lewiston Bleachery and Dye Works . . . . . .
. . . . . Lewiston, Me. . . . Apr. 27, 1892.
John Waterman . . . Treas. Warren Manufg. Co. . . . . Warren, R. I. . . . Apr. 30, 1884.
Joseph Watters . . . . Supt. Osborn Mills . . . . . Fall River, Mass. . . Apr. 26, 1900.
F. E. Wattles . . . . Agt. Boscawen Mills . . . . . Penacook, N. H. . . Oct. 5, 1899.
Joseph W. Wattles . . Manufacturers' Supplies . . . . Canton Junction, Mass. July 18, 1866.
George W. Weeks . . . . . Clinton, Mass. . . . Apr. 21, 1869.
W. B. Smith Whaley { Mechanical & Mill Engineer, Pres. Richland Cotton Mills, Granby Cotton Mills, } 1328 Main St., Columbia, S. C. Apr. 24, 1895.
H. D. Wheat . . . . . { Pres. and Treas. Gaffney Mfg. Co., Pres. and Treas. Alpha Mills, Charlotte, N. C. } . . . .
. . . . . Gaffney, S. C. . . . Apr. 24, 1895.

Channing Whitaker	Infringement and Patentability of Inventions . . . . . Lowell Machine Shop	Lowell, Mass.	Oct. 15, 1873.
A. Tenny White	Supt. Manville Co.	Manville, R. I.	Oct. 26, 1887.
Charles D. White	Agt. Uncasville Mfg. Co.	Norwich, Conn.	Oct. 27, 1897.
Z. L. White	White Brothers	Winchendon, Mass.	Apr. 28, 1897.
Arthur F. Whitin	Pres. Saunders Cotton Mills	Whitinsville, Mass.	Apr. 24, 1895.
Fred B. Whitin	Agt. Uxbridge Cotton Mills	Linwood, Mass.	Apr. 28, 1897.
Henry T. Whitin	Treas Paul Whitin Manufg. Co. . .	Northbridge, Mass.	Apr. 25, 1877.
Alfred N. Whiting	Sec. and Treas. L. M. Harris Manufg. Co.	Oakdale, Mass.	Apr. 21, 1875.
William S. Whitney	Supervising Engineer, American Woolen Co.	Lawrence, Mass.	Apr. 24, 1878.
Arthur Whittam	Director Textile Dept., Mississippi Agricultural and Mechanical College, ...	Agricultural College, Miss.,	Apr. 28, 1898.
William Whittam, Jr.	Mgr. Lawton Spinning Co.	Woonsocket, R. I.	Apr. 26, 1893.
George F. Whitten	Agt. Amory Mfg. Co.	Manchester, N. H.	Oct. 26, 1892.
John H. Whitten	Supt. Stark Mills	Manchester, N. H.	Apr. 28, 1898.
W. R. B. Whittier	Mgr. Whittier Mills	Chattahoochee, Ga.	Oct. 18, 1900.
Nelson Whittier	Treas. Whittier Mills	Lowell, Mass.	Oct. 18, 1900.
Edward B. Wilbur	Supt. Gaffney Mfg. Co.	Gaffney, S. C.	Oct. 30, 1889.
Benjamin Wilcox	Treas. City and Bristol Mfg. Co. . .	New Bedford, Mass.	Apr. 26, 1900.
Henry M. Wilcox	Treas. John Rhodes Warp Co. . . .	Millbury, Mass.	Apr. 24, 1889.
John B. Wild	Pres. Oneita Knitting Mills	Utica, N. Y.	Apr. 26, 1900.
Eben C. Willey	Agt. Atlantic Cotton Mills	Lawrence, Mass.	Apr. 29, 1896.
Broadus E. Willingham,	Sec. and Treas. Willingham Cotton Mills	Macon, Ga.	Oct. 18, 1900.
Theop. W. Wilmarth	Asst. Supt. Berkshire Cotton Mfg. Co., ...	Adams, Mass.	Oct. 31, 1883.
Thomas Wilmarth	Supt. Saunders Cotton Mills	Saundersville, Mass.	Apr. 21, 1875.
J. P. Wilson	Treas. Dover Yarn Mills	Charlotte, N. C.	Oct. 24, 1895.
George Wood	Pres. and Treas. Millville Manufg. Co. . . . . 626 Chestnut St.,	Phila., Pa.	Oct. 16, 1872.
John P. Wood	Spring Garden and 22d St.,	Philadelphia, Pa.	Apr. 28, 1897.
Oscar W. Wood	Treas. Germantown Spinning Co.	Germantown, Philadelphia, Pa.	Oct. 18, 1900.
C. J. H. Woodbury	Secretary and Treasurer	Lynn, Mass.	Oct. 29, 1879.
Adelbert R. Young	Supt. Ashland Cotton Co.	Jewett City, Conn.	Apr. 25, 1894.
James M. Young	Mgr. Hamilton Cotton Co.	Hamilton, Ont., Can.	Apr. 27, 1899.

ASSOCIATE MEMBERS.

S. B. Alexander, Jr. . . Pres. S. B. Alexander, Jr. Co. . . . Charlotte, N. C. . . . Oct. 18, 1900.
Eugene C. Andres . . Cotton Merchant . . . . . .
. . . . . John Hancock Building, Boston, Mass. . . . . Oct. 18, 1900.
H. B. Ashton . . . . Agt. S. A. Felton & Son Co. . . . . .
. . . . . 153 Adams St., Medford, Mass. . . . Apr. 26, 1900.
Henry Ashworth . . . Agt. of Elijah Ashworth, Mfr. of Card Clothing . . . . .
. . . . . Fall River, Mass. . . Apr. 28, 1897.

George R. Babbitt . . . Pres. and Gen. Mgr. American Oil Co. . . . . .
. . . . . 182 So. Water St., Providence, R. I. . . Apr. 24, 1895.
D. C. Ball . . . . . Gen. Mgr. The American Cotton Co. . . . . .
. . . . . 27 William St., New York, N. Y. . . Oct. 24, 1895.
Edwin Barnes . . . . Vice Pres. Wm. Firth Co. . . . . .
. . . . . 67 Equitable Building, Boston, Mass. . . . . Apr. 26, 1900.
George S. Barnum . . Sec. and Treas. The Bigelow Co. . New Haven, Conn. . Apr. 24, 1895.
Colin C. Bell . . . . Pres. and Treas. Laminar Fibre Co. No. Cambridge, Mass. Apr. 29, 1896.
Frank P. Bennett . . . Publisher American Wool and Cotton Reporter . . . . .
. . . . . 530 Atlantic Ave., Boston, Mass. . . . Sept. 22, 1896.
William H. Bent . . . Treas. Mason Machine Works . . . Taunton, Mass. . . . April 29, 1896.
F. H. Bishop . . . . . Gen. Mgr. Universal Winding Co. . . . . .
. . . . . 95 South St., Boston, Mass. . . . . Apr. 26, 1900.
J. Payson Bradley . . . The Kehew Bradley Co. . . . . .
. . . . . 24 Purchase St., Boston, Mass. . . . Apr. 24, 1895.
J. Frank Braids . . Mgr. Grease & Oil Dept., Charles S. Bush Co. . . . . .
. . . . . 212 Weybosset St., Providence, R. I. . . Apr. 28, 1897.
Henry G. Brinckerhoff . N. E. Mgr. Green Fuel Economizer Co., Box 2654 . . . .
. . . . . Room 1053, Exchange Bldg., 53 State St., Boston, Mass. Sept. 22, 1896.
D. Russell Brown . . . Pres. Brown Bros. Co. . . . . Providence, R. I. . . Apr. 24, 1895.
H. Martin Brown . . . Brown Bros. Co. . . . . Providence, R. I. . . Apr. 24, 1895.
Percy H. Brundage . . American Industrials Co. . . . . .
. . . . . 290 Broadway, New York . . . . . Oct. 5, 1899.
John H. Burghardt . . Page Belting Co. . . . 31 Pearl St., Boston, Mass. . . . Apr. 24, 1895.
Eugene E. Burnham . . Belt Mfr. . . . . 252 Lowell St., Lawrence, Mass. . . Oct. 24, 1895.
Fred N. Bushnell . . . Mech. Supt. Narragansett Electric Light Co. . . . . .
. . . . . 3 South St., Providence, R. I. . . Sept. 29, 1898.
Harry W. Butterworth . Sec. H. W. Butterworth & Sons . . . . . .
. . . . . York and Cedar Sts., Philadelphia, Pa. . . Oct. 27, 1897.
James Butterworth . Pres. H. W. Butterworth & Sons Co. . . . . .
. . . . . York and Cedar Sts., Philadelphia, Pa. . . Apr. 24, 1895.

Albert L. Calder, 2nd . Cotton Broker . . . . . .
. . . . . 28 Market Square, Box 206, Providence, R. I. . . Apr. 26, 1900.
French Campbell . . . Commission Merchant, 75 Granite St., Manchester, N. H. . Oct. 27, 1897.
Malcolm Campbell . . Gen. Mgr. Woonsocket Machine and Press Co. . . . . .
. . . . . Woonsocket, R. I. . . Apr. 24, 1895.

W. W. Carey . . . . . Machinery and Pulley Manufacturer, Lowell, Mass. . . . Apr. 24, 1895.
J. E. Cheesman . . . . Gen. Mgr. Cheesman Cotton Gin Co. . . . . 27 William St., New York . . . . . Oct. 5, 1899.
Charles H. Child . . . Treas. Standard Mill Supply Co. . . . . P. O. Box 1406, 77 Exchange Place, Providence, R. I. . . Apr. 24, 1895.
Henry C. Clark . . . . Asst. Treas. Standard Mill Supply Co. . . . . Box 714, Providence, R. I. . . Apr. 28, 1898.
Peter H. Corr . . . . Cotton and Cotton Yarns and Waste . . . . . 38 Court St., Taunton, Mass. . . . Apr. 24, 1895.
C. C. Cowan . . . . . 372 Front St., Memphis, Tenn. . . Oct. 5, 1899.
Thomas G. Cox . . . . Selling Agt. Mason Machine Works . . . . . Box 316, . Taunton, Mass. . . . Apr. 24, 1895.
George Crompton . . . . . Worcester, Mass. . . Oct. 27, 1897.
Randolph Crompton . . . . . Worcester, Mass. . . Oct. 27, 1897.
C. F. Curwen . . . . Treas. Dinsmore Mfg. Co. . . . . Salem, Mass. . . . . Apr. 27, 1899.
Joseph L. Cushing . . Mfr. of Cotton Conveying Systems . Lowell, Mass. . . . . Apr. 26, 1900.

Frederick I. Dana . . . Manager. Thomas Phillips Co. . . . Providence, R. I. . . Apr. 24, 1895.
R. H. Deming . . . . Cotton Broker . 10 So. Water St., Providence, R. I. . . Apr. 24, 1895.
C. E. W. Dow . . . . Agt. American Moistening Co. & Wm. Firth Co. . . . . 40 So. Forsyth St., Box 410, Atlanta, Ga. . . . . Apr. 24, 1895.
Frederick A. Downes . Sec. Factory Mutual Fire Insurance Cos. . . . . 925 Chestnut St., Philadelphia, Pa. . . Oct. 27, 1897.
W. L. Draper . . . . Mgr. Dodge Mfg. Co. . . . . Atlanta Branch, 522 Prudential Building, Atlanta, Ga. . . . . Oct. 18, 1900.

G. B. Emmons . . . . Pres. Emmons Loom Harness Co. . . . . May St., Lawrence, Mass. . . Oct. 24, 1895.
T. C. Entwistle . . . . Cotton Machinery Builder . . . . . Cor. Market and Worthen Sts., Lowell, Mass. . . . . Apr. 24, 1895.

D. D. Felton . . . . . Treas. S. A. Felton & Son Co. . . . Manchester, N. H. . Apr. 24, 1895.
John W. Ferguson . . . . . 253 Broadway, Postal Telegraph Bldg., N. Y., ... and Paterson, N. J. . . . Apr. 24, 1895.
Redington Fiske . . . Gen. Mgr. Planters Compress Co. . . . . 183 Essex St., Boston, Mass. . . . Apr. 27, 1899.
J. Herbert Foster . . . Cotton Broker . 10 South Water St., Providence, R. I. . . Apr. 24, 1895.
Merrill A. Furbush . . Pres. M. A. Furbush & Son Machine Co. . . . . 428-430 Philadelphia Bourse, Philadelphia, Pa. . . Oct. 27, 1897.
John T. Fyans . . . . Agt. Fyans, Frazer & Blackway Co. . . . . 411 Beach St., Fall River, Mass. . . Apr. 28, 1897.

H. P. Garland . . . . Treas. Loom Picker Co. . . . . Biddeford, Me. . . . Oct. 24, 1895.
Royal W. Gates . . . . Josiah Gates & Sons, Belting . . . . . 307 Market St., Lowell, Mass. . . . Apr. 24, 1895.

Rufus B. Goff . . . . Pres. Standard Mill Supply Co. . . . . .
. . . . . 77 Exchange Pl., Box 714, Providence, R. I. . . Apr. 28, 1897.
Sumner S. Gould . . . Mgr. Lowell Branch American Card Clothing Co. . . . .
. . . . . Lowell, Mass. . . . Oct. 5, 1899.
William S. Granger . . Prest. Granger Foundry & Machine Co., Providence, R. I. . Apr. 24, 1895.
Henry T. Grant, Jr. . . Pres. Mercantile Mutual Fire Ins. Co. . . . . .
. . . . . Box 1153, 723 Banigan Building, Providence, R. I. . . Oct. 27, 1897.
Arthur F. Gray . . . . Mill Architect and Engineer . . . . . .
. . . . . 53 State St., Room 509, Boston, Mass. . . . Oct. 18, 1900.

A. Walter Harris . . . Treas. A. W. Harris Oil Co. . . . . .
. . . . . 326 So. Water St., Providence, R. I. . . Oct. 24, 1895.
Alfred H. Hartley . . Dealer in Oils and Mill Supplies . . . . . .
. . . . . Box 409, Fall River, Mass. . . Oct. 27, 1897.
Jerome Hill . . . . . Pres. Tennessee Planters' Co. . . . . .
. . . . . 334 Front St., Memphis, Tenn. . . . Apr. 29, 1896.
Richard H. Hill . . . Gen. Sales Agt. James Hunter Machine Co. . . . . .
. . . . . 70 Kilby St., Boston, Mass. . . . . Apr. 26, 1900.
Alfred K. Hobbs . . . Rubber, Leather and Mill Supplies . Manchester, N. H. . Oct. 18, 1900.
John Hogg . . . . . Smith, Hogg & Gardiner, 140 Essex St., Boston, Mass. . . . Apr. 27, 1899.
Henry A. Holcomb . . . . . Box 249, New Bedford, Mass. . Oct. 24, 1895.
Henry S. Houghton, Sr., Mfr. Grids and Beaters . . . . . .
. . . . . 61 Pond St., Woonsocket, R. I. . Apr. 28, 1897.
C. H. Hutchins . . . . Pres. Crompton & Knowles Loom Works . . . . . .
. . . . . Worcester, Mass. . . Oct. 24, 1895.

David Jackson . . . { Pres. and Mgr. Jackson Pat. Shell Roll Co. . . . . } Pawtucket, R. I. . . Apr. 24, 1895.

William B. Kehew . . The Kehew-Bradley Co. . 24 Purchase St., Boston, Mass. . Apr. 24, 1895.
James H. Kendall . . Edward Kendall & Sons . . . . . Cambridgeport, Mass., Sept. 29, 1898.
John E. Kendrick . . . Gen. Agt. American Supply Co. . . . . .
. . . . . Box 822, Providence, R. I. . . Oct. 5, 1899.
Frank B. Kenney . . . Kitson Machine Co. . . . . Lowell, Mass. . . . Oct. 5, 1899.

W. C. Langford . . . Oil Dealer, . . . 86 Weybosset St., Providence, R. I. . . Apr. 27, 1899.
Josiah M. Lasell . . . Asst. Treas. Whitin Machine Works, Whitinsville, Mass. . Apr. 24, 1895.
Samuel D. Lawton . . Treas. Fall River Machine Co. . . . Fall River, Mass. . . Oct. 18, 1900.
John H. Lorimer . . . Builder of Textile Machines . . . . . .
. . . . . Ontario and Lawrence Sts., Philadelphia, Pa. . . Oct. 27, 1897.
Stephen C. Lowe . . . Mill Supplies . . . . 87 Union St., New Bedford, Mass. . Oct. 24, 1895.
George A. Lowry . . . Consulting Eng., . 299 Marginal St., East Boston, Mass. . Apr. 28, 1898.

Francis E. Macomber . Mill Supplies . . . . 21 Pearl St., Boston, Mass. . . . . Apr. 26, 1900.
F. H. Maynard . . . . Bus. Mgr. Gen. Fire Extinguisher Co., Providence, R. I. . . Apr. 24, 1895.

D. E. McGaw	Mgr. Supply Dept.. Southern Belting Co.	P. O. Box 63, Atlanta, Ga.	Oct. 18, 1900.
H. G. McKerrow	Textile Machinery	31 State St., Boston, Mass.	Sept. 22, 1896.
D. K. McLaren	Mfr. of Leather Belting	751 Craig St., Montreal, P. Q., Can.	Apr. 26, 1900.
George H. Meader	Steam Appliances	35 Oliver St., Boston, Mass.	Apr. 24, 1895.
John R. Mitchell	Mitchell-Bissell Co.	134 Dexter St., Malden, Mass.	Oct. 18, 1900.
Charles B. Moore	Agt. Knowles Steam Pump Works	54 Oliver St., Boston, Mass.	Apr. 26, 1900.
George B. Morison	Catlin & Co.	67 Chauncy St., Boston, Mass.	Apr. 24, 1895.
John H. Nelson	Treas. William Firth Co.	67 Equitable Building, Box. 1460, Boston, Mass.	Apr. 26, 1900.
George C. Newell	Starkweather & Shepley	17 Custom House St., Providence, R. I.	Sept. 29, 1898.
William R. Noone	Mfr. Roller and Slasher Cloth	100 Pearl St., Boston, Mass.	Oct. 27, 1897.
Sidney B. Paine	General Electric Co.,	200 Summer St., Boston, Mass.	Apr. 24, 1895.
Arthur Parkinson	Selling Agt. Arabol Mfg. Co.,	13 Gold St., New York, N. Y.	Apr. 28, 1897.
Stephen Minot Pitman	Sec'y Narragansett Mutual Fire Insurance Co.	Box 315, Providence, R. I.	Apr. 24, 1895.
Vladimir P. Polevoy	Agent Great Yaroslavskaia Cotton Mill (of Yaroslave), Russia	120 Broadway, N. Y.	Apr. 28, 1897.
Charles A. M. Praray	Chas. A. M. Praray & Co., Mill Architect and Engineer	832 and 833 Banigan Building, Providence, R. I.	Apr. 28, 1897.
Charles F. Randall	Expert in Textiles	Room 350, Tremont Building, Boston, Mass.	Apr. 24, 1895.
Peleg A. Rhodes	Inspector of Cotton Mills	P. O. Box 315, Providence, R. I.	Oct. 5, 1899.
Richard H. Rice	Treas. Providence Engineering Work	521 So. Main St., Providence, R. I.	Apr. 24, 1895.
E. R. Richardson	Asst. Treas. American Machine Co.	Box 677, Pawtucket, R. I.	Apr. 26, 1900.
C. E. Roberts	Mgr. Hartford Steam Boiler Insurance & Inspection Co.	125 Milk St., Boston, Mass.	Apr. 24, 1895.
Louis E. Robinson	Cotton Agent Sea Island Cotton	34 So. Water St., Providence, R. I.	Oct. 27, 1897.
E. A. Rusden	Treas. Rusden Machine Co.	Warren, R. I.	Oct. 18, 1900.
John M. Russell	Asst. Treas. Crompton & Knowles Loom Works	Worcester, Mass.	Oct. 24, 1895.
John E. Searles	Pres. Am. Cotton Co.,	27 William St., New York	Oct. 5, 1899.
J. Foster Searles	Treas. American Loom Co.	Readville, Mass.	Apr. 26, 1900.
J. A. Shepherd	N. E. Mgr. The Stirling Co.	53 State St., Room 631, Exchange Building, Boston, Mass.	Oct. 18, 1900.

Harry M. Smith . . . Vice-Pres. Standard Mill Supply Co. . . . . .
. . . . . 77 Exchange Pl., Box 714, Providence, R. I. . . Apr. 28, 1897.
R. Paul Snelling . . . Treas. Saco and Pettee Machine Shops . . . . . .
. . . . . Newton Upper Falls, Mass. . Sept. 22, 1896.
Lewis R. Speare . . { Treas. and Gen. Mgr. The Alden Speare's Sons Co., Oil and Mill Supplies } . . . . . .
. . . . . 369 Atlantic Ave., Boston, Mass. . . . . Oct. 24, 1895.
Henry C. Spence . . . Gen. Mgr. Metallic Drawing Roll Co. Indian Orchard, Mass. Apr. 24, 1895.
George W. Stafford . . Mgr. Crompton & Knowles Loom Works . . . . . .
. . . . . Providence, R. I. . . Apr. 24, 1895.
H. E. Stafford . . . . Asst. Mgr. Crompton & Knowles Loom Works . . . . .
. . . . . Providence, R. I. . . Oct. 18, 1900.
James Strang . . . . Selling Agt. Metallic Drawing Roll Co. . . . . .
. . . . . 123 Hampden St., Indian Orchard, Mass. Oct. 27, 1897.
William H. Stratton . . Mgr. Factory Insurance Association . . . . . .
. . . . . 95 Pearl St., Hartford, Conn. . . Apr. 28, 1897.
Daniel J. Sully . . . . Cotton Broker, T. M. Reynolds & Co., ...
. . . . . 34 South Water St., Providence, R. I. . . Apr. 24, 1895.
John Sykes, J. P. . . . Pres. English Card Clothing Co. . . . . .
. . . . . Acre House, Huddersfield, Eng. . Oct. 18, 1900.

Cyrus A. Taft . . . . Agt. Whitin Machine Works . . . Whitinsville, Mass. . Apr. 24, 1895.
Charles F. Taylor . . . Successor to Burgess Cop Tube Co., ...
. . . . . 21 Eddy St., Providence, R. I. . . Apr. 28, 1898.
James T. Thornton . . Sec. and Treas. A. B. Pitkin Machinery Co. . . . . .
. . . . . Providence, R. I. . . Oct. 18, 1900.
Rienzi W. Thurston . Machinery Manufacturer . . . . . Fall River, Mass. . . Oct. 18, 1900.
George E. Tillinghast . Treas. Tillinghast, Stiles Co. . . . . .
. . . . . Industrial Trust Bldg., 49 Westminster St., Providence, R. I. . . Oct. 18, 1900.
A. Curtis Tingley . . . Treas. National Ring Traveler Co. . . . . .
. . . . . 7 Eddy St., Providence, R. I. . . Sept. 22, 1896.
William V. Threlfall . . Selling Agt. Saco and Pettee Machine Shops . . . . . .
. . . . . Biddeford, Me. . . . Apr. 24, 1895.
Allison W. Trafford . . Mfr. of Ring Travelers . . . . . .
. . . . . 116 Pocasset St., Fall River, Mass. . . Apr. 26, 1900.

Frank H. Underwood . Resident Mgr. Dodge Mfg. Co. . . . . .
. . . . . 137 Purchase St., Boston, Mass. . . . Apr. 29, 1896.

Justin A. Ware . . . . Crompton & Knowles Loom Works . Worcester, Mass. . . Oct. 24, 1895.
Lettice R. Washburn . Mill Contractor, 235 North Water St., New Bedford, Mass. . Oct. 5, 1899.
Walter S. Watson . . . Haworth & Watson, Mfrs. Paper Tubes . . . . . .
. . . . . for Textile Manufg. . Box 996, Lowell, Mass. . . . Oct. 24, 1895.
Stephen M. Weld, . . Cotton Buyer . . . . . 89 State St., Boston, Mass. . . . Apr. 27, 1899.
William R. West . . . Roll Coverer . . 830 Purchase St., New Bedford, Mass. . Sept. 22, 1896.

W. W. White	Agent Holyoke Machine Co.	Worcester, Mass.	Apr. 27, 1899.
G. Marston Whitin	Treas. Whitin Machine Works	Whitinsville, Mass.	Apr. 24, 1895.
Fred A. Wilde	Asst. Mgr. The A. T. Atherton Machine Co.	Pawtucket, R. I.	Apr. 28, 1897.
Erving Yale Woolley	Stoddard, Haserick, Richards & Co.	152 Congress St., Boston, Mass.	Apr. 24, 1895.

Honorary Members	4
Active Members	491
Associate Members	133
Total Membership	628

MEMBERS OF THE ASSOCIATION,

Oct. 18, 1900.

ARRANGED BY STATES.

MAINE.

Auburn	William Hayes	Barker Mill.
Bath	Harry W. Kimball	
Biddeford	James G. Garland	10 Adams St.
Biddeford	H. P. Garland	Loom Picker Co.
Biddeford	Robert McArthur	Pepperell Mfg. Co.
Biddeford	William V. Threlfall	Saco & Pettee Machine Shops.
Brunswick	Russell W. Eaton	Cabot Manufg. Co.
Kennebunk	Robert W. Lord	R. W. Lord & Co.
Lewiston	Joseph P. Battles	Lewiston Mach. Co.
Lewiston	George W. Bean	Androscoggin Mills.
Lewiston	H. B. Estes	Continental Mills.
Lewiston	William D. Pennell	Hill Manufg. Co.
Lewiston	Herbert L. Pratt	Bates Manufg. Co.
Lewiston	Roscoe C. Reynolds	
Lewiston	James A. Walsh	Lewiston Bleachery and Dye Works.
Lisbon	W. H. Miles	Farwell Mills.
Saco	Elmer E. Page	York Manufg. Co.
Sanford	Louis B. Goodall	Goodall Worsted Co.
Westbrook	Philip Dana	Dana Warp Mills.
Westbrook	Woodbury K. Dana	Dana Warp Mills.

NEW HAMPSHIRE.

Charlestown	Samuel Webber	Hydraulic Engineer.
Claremont	Frank P. Vogl	Monadnock Mills.
Dover	Charles H. Fish	Cocheco Manufg. Co.
Exeter	Hervey Kent	Exeter Manufg. Co.
Greenville	Frederick W. Ely	Columbian Manufg. Co.

Manchester	Henry D. Bourne	Hooksett Mills.
Manchester	Stephen N. Bourne	Stark Mills.
Manchester	French Campbell	75 Granite St.
Manchester	George A. Clark	Manchester Mills.
Manchester	D. D. Felton	S. A. Felton & Son Co.
Manchester	Alfred K. Hobbs	Rubber, Leather and Mill Supplies.
Manchester	Elliott Cowdin Lambert	Amoskeag Manufg. Co.
Manchester	Charles H. Manning	Amoskeag Manufg. Co.
Manchester	Charles D. McDuffie	Manchester Mills.
Manchester	Herman F. Straw	Amoskeag Manufg. Co.
Manchester	George F. Whitten	Amory Manufg. Co.
Manchester	John H. Whitten	Stark Mills.
Milford	M. F. Foster	
Milford	Frank E. Kaley	Morse & Kaley Manufg. Co.
Nashua	William D. Cadwell	Nashua Manufg. Co. & Jackson Co.
Nashua	William H. Cadwell	Jackson Co.
Nashua	Roscoe S. Milliken	Nashua Mfg. Co.
Penacook	Marcellus Gould	N. H. Spinning Co.
Penacook	F. E. Wattles	Boscawen Mills.
Pittsfield	George E. Kent	Exeter Manufg. Co.
Salmon Falls	O. S. Brown	Salmon Falls Manufg. Co.
Somersworth	Charles H. Plummer	Great Falls Manufg. Co.
Suncook	David L. Jewell	China, Webster & Pembroke Mills.
Suncook	Edmund E. Truesdell	China, Webster & Pembroke Mills.

VERMONT.

North Pownal	Thomas Armstrong	North Pownal Manufg. Co.

MASSACHUSETTS.

Adams	John S. Adams, Jr.	Adams Bros. Manufg. Co.
Adams	James C. Chalmers	Renfrew Mfg. Co.
Adams	Z. D. Hall	Berkshire Cotton Manufg. Co.
Adams	A. B. Mole	Greylock Mill.
Adams	Charles T. Plunkett	Berkshire Cotton Manufg. Co.
Adams	L. B. Renfrew	Renfrew Mfg. Co.
Adams	Theop. W. Wilmarth	Berkshire Cotton Mfg. Co.
Amesbury	M. W. Quinn	Hamilton Woolen Co.
Andover	John W. Bell	Smith & Dove Manufg. Co.
Belmont	John Kilburn	
Blackstone	George E. Spofford	Blackstone Manufg. Co.
Bondsville	B. A. Alexander	Boston Duck Co.
Bondsville	Elmer G. Childs	Boston Duck Co.
Boston	Charles B. Amory	70 Kilby St.

Boston	Frederic Amory	40 Water St.
Boston	Eugene C. Andres	John Hancock Building.
Boston	Edward Atkinson	31 Milk St.
Boston	E. W. Atkinson	152 Congress St.
Boston	Edwin Barnes	67 Equitable Building.
Boston	Frank P. Bennett	Am. Wool and Cotton Reporter.
Boston	F. H. Bishop	95 South St.
Boston	J. Payson Bradley	24 Purchase St.
Boston	Henry G. Brinckerhoff	53 State St.
Boston	John H. Burghardt	31 Pearl St.
Boston	Alfred Clarke,	23 Central St.
Boston	Frank B. Comins	150 Devonshire St., Room 67.
Boston	Alphonse S. Covel	70 Kilby St.
Boston	Augustus De Cort	P. O. Box 2815.
Boston	P. Y. DeNormandie	30 Kilby St.
Boston	Albert W. Dimick	27 State St., Room 107.
Boston	Ambrose Eastman	53 State St.
Boston	William Firth	150 Devonshire St.
Boston	Redington Fiske	183 Essex St.
Boston	Alfred M. Goodale	50 State St.
Boston	Arthur F. Gray	53 State St., Room 509.
Boston	Stephen Greene	93 Federal St.
Boston	Richard H. Hill	70 Kilby St.
Boston	Franklin W. Hobbs	Arlington Mills.
Boston	John Hogg	140 Essex St.
Boston	Henry S. Howe	68 Chauncy St.
Boston	William B. Kehew	24 Purchase St.
Boston	Evan Arthur Leigh	70 Kilby St.
Boston	William C. Lovering	40 Water St.
Boston	Herbert Lyman	P. O. Box 1717.
Boston	Francis E. Macomber	21 Pearl St.
Boston	Charles T. Main	1112 Exchange Building.
Boston	Fred C. McDuffie	40 Water St.
Boston	H. G. McKerrow	31 State St.
Boston	George H. Meader	35 Oliver St.
Boston	Charles B. Moore	54 Oliver St.
Boston	George B. Morison	67 Chauncy St.
Boston	John H. Nelson	P. O. Box 1460.
Boston	William R. Noone	100 Pearl St.
Boston	Sidney B. Paine	200 Summer St.
Boston	Francis J. Parker	81 Milk St.
Boston	Benjamin Phipps	4 Winthrop Sq.
Boston	Charles F. Randall	350 Tremont Building.
Boston	Charles E. Riley	281 Congress St.
Boston	C. E. Roberts	125 Milk St.
Boston	Arnold B. Sanford	67 Chauncy St.

Boston	J. Herbert Sawyer	Care H. B. Sawyer, 4 P. O. Square, Boston.
Boston	George H. Shapley	78 Chauncy St.
Boston	J. A. Shepherd	631 Exchange Building.
Boston	William F. Sherman	27 State St.
Boston	Lewis R. Speare	369 Atlantic Ave.
Boston	James P. Tolman	115 Congress St.
Boston	Charles D. Turnbull	The Ludlow.
Boston	Frank H. Underwood	137 Purchase St.
Boston	Frederick T. Walsh	Thomas Leyland & Co.
Boston	Stephen M. Weld	89 State St.
Boston	Erving Yale Woolley	152 Congress St.
Cambridgeport	James H. Kendall	Edward Kendall & Sons.
Cambridgeport	Henry B. Sprague	Boston Woven Hose & Rubber Co.
Canton	Willis S. Shepard	Amer. Net & Twine Co.
Canton Junction	Joseph W. Wattles	Manufacturers' Supplies.
Chicopee Falls	Henry A. Bailey	Chicopee Manufg. Co.
Clinton	William G. McLoon	Lancaster Mills.
Clinton	Charles H. Richardson	Lancaster Mills.
Clinton	John R. Rostron	Lancaster Mills.
Clinton	George P. Taylor	Danielsonville Cotton Co.
Clinton	George W. Weeks	
East Boston	George A. Lowry	299 Marginal St.
East Hampton	William B. Fitz	West Boylston Mfg. Co.
Fall River	F. S. Akin	Cornell Mills.
Fall River	Henry Ashworth	Agt. for Card Clothing Manufr.
Fall River	John P. Bodge	Arkwright Mills.
Fall River	Jefferson Borden, Jr.	Fall River Bleachery.
Fall River	Nathaniel B. Borden	Barnard Manufg. Co.
Fall River	Richard B. Borden	Troy C. & W. Manufg. Co.
Fall River	Thomas J. Borden	Richard Borden Manufg. Co.
Fall River	Isaac A. Brown	Narragansett Mills.
Fall River	George A. Chace	Bourne Mills.
Fall River	Simeon B. Chase	King Phillip Mills.
Fall River	John A. Collins	American Linen Co.
Fall River	B. D. Davol	Barnard Manufg. Co.
Fall River	Frank H. Dwelly	Tecumseh Mills.
Fall River	David H. Dyer	6, 7 and 8 Pocasset Bank Building.
Fall River	William Evans	Richard Borden Manufg. Co.
Fall River	John T. Fyans	411 Beach St.
Fall River	Daniel Gilligan	Pocasset & Metacomet Mills.
Fall River	Effingham C. Haight	Wampanoag Mills.
Fall River	Arthur M. Hamilton	Parker Mills.
Fall River	John F. Hamlet	P. O. Box 160.
Fall River	Alfred H. Hartley	Oils and Mill Supplies.
Fall River	Samuel E. Hathaway	Fall River Iron Works Co.

Fall River	William Hathaway	Barnard Mfg. Co.
Fall River	William B. Hawes	P. O. Box 733.
Fall River	George H. Hills	Davol Mills and Stevens Mfg. Co.
Fall River	William P. Holt	Barnaby Mills.
Fall River	Edward B. Jennings	N. E. Cotton Yarn Co.
Fall River	Benjamin B. Kirk	Fall River Iron Works Co.
Fall River	George H. Law	815 Walnut St.
Fall River	Samuel D. Lawton	Fall River Machine Co.
Fall River	Leontine Lincoln	Seaconnet Mills.
Fall River	Philip A. Mathewson	King Philip Mills.
Fall River	Thomas McAuliffe	Stevens Manufg. Co.
Fall River	J. Edward Osborne	American Linen Co.
Fall River	Herbert W. Owen	Merchants' Mfg. Co.
Fall River	Joseph H. Potter, Jr.	Durfee Mills.
Fall River	Benj. H. Roberts	163 Grove St.
Fall River	Charles M. Shove	Granite Mills.
Fall River	Abbott E. Slade	863 High St.
Fall River	J. C. Smith	Chace Mills.
Fall River	John Sullivan	Union Cotton Manufg. Co.
Fall River	Timothy Sullivan	Davol Mills.
Fall River	Richard Thackeray	Weetamoe Mills.
Fall River	Rienzi W. Thurston	Machinery Manufacturer.
Fall River	Horace W. Tinkham	Robeson Mills.
Fall River	Allison W. Trafford	116 Pocasset St.
Fall River	George F. Tryon	199 Purchase St.
Fall River	Robinson Walmsley	Tecumseh Mills.
Fall River	Joseph Watters	Osborn Mills.
Fisherville	Albert W. Dimick	Fisher Mfg. Co.
Fiskdale	John Gregson	Fiskdale Mills.
Fitchburg	George P. Grant, Jr.	Grant Yarn Co.
Fitchburg	W. E. Keach	123 Myrtle Ave.
Fitchburg	John Leiper	Fitchburg Worsted Mills.
Fitchburg	Arthur H. Lowe	Parkhill Manufg Co.
Fitchburg	David Lowe	Parkhill Manufg. Co.
Fitchburg	Thomas C. Sheldon	Fitchburg Duck Mills.
Fitchburg	Walter F. Stiles	Orswell Mills.
Fitchburg	Ralph E. Thomspon	Parkhill Manufg. Co.
Great Barrington	Jno. H. C. Church	Monument Mills.
Griswoldville	James C. Deane	Griswoldville Manufg. Co.
Holyoke	John W. Dickinson	Lyman Mills.
Holyoke	Ernest Lovering	Lyman Mills.
Holyoke	W. Marshall Taylor	Merrick Thread Co.
Hopedale	Eben S. Draper	Draper Co.
Hopedale	George A. Draper	Draper Co.
Hopedale	George Otis Draper	Draper Co.
Hopedale	William F. Draper	Draper Co.
Hopedale	William F. Draper, Jr.	Draper Co.

Housatonic	T. G. Ramsdell	Monument Mills.
Hyde Park	T. B. Stevenson	Readville Cotton Mill.
Indian Orchard	William C. Godfrey	Indian Orchard Co.
Indian Orchard	Henry C. Spence	Metallic Drawing Roll Co.
Indian Orchard	James Strang	123 Hampden St.
Ipswich	James W. Brown	Box 312.
Lawrence	William A. Barrell	Lawrence Duck Co.
Lawrence	Eugene E. Burnham	252 Lowell St.
Lawrence	G. B. Emmons	May St.
Lawrence	William J. Hadfield	225 Bailey St.
Lawrence	William D. Hartshorne	Arlington Mills.
Lawrence	James I. Milliken	Everett Mills.
Lawrence	Walter E. Parker	217 Haverhill St.
Lawrence	Henry C. Phillips	Atlantic Cotton Mill.
Lawrence	Robert Redford	Box 28.
Lawrence	Francis H. Silsbee	Pacific Mills.
Lawrence	George W. Towne	Arlington Mills.
Lawrence	William D. Twiss	Everett Mills.
Lawrence	William S. Whitney	American Woolen Co.
Lawrence	Eben C. Willey	Atlantic Cotton Mills.
Leicester	Charles A. Denny	American Card Clothing Co.
Linwood	Amos G. Maddox	Linwood Mill.
Linwood	Fred B. Whitin	Uxbridge Cotton Mills.
Lowell	Franklin Allen	Boott Mills.
Lowell	George E. Ames	Lawrence Manufg. Co.
Lowell	Frank A. Bowen	Appleton Co.
Lowell	Edward N. Burke	Lowell Machine Shop.
Lowell	W. W. Carey	Machinery and Pulley Manufacturer.
Lowell	Clarence N. Childs	43 Pine St.
Lowell	A. G. Cumnock	Appleton Co.
Lowell	Joseph L. Cushing	Mfr. Cotton Conveying Systems.
Lowell	Albert W. Danforth	881 Bridge St.
Lowell	Edward P. Dennis	Lowell Machine Shop.
Lowell	William A. Eastman	Lowell Hosiery Co.
Lowell	T. C. Entwistle	Cor. Market and Worthen Sts.
Lowell	James T. Ferguson	Boott Mills.
Lowell	Frederick A. Flather	Lowell Machine Shop.
Lowell	Royal W. Gates	307 Market St.
Lowell	Sumner S. Gould	Lowell Branch Am. Card Clo. Co.
Lowell	William E. Hall	Shaw Stocking Co.
Lowell	James G. Hill	Merrimack House.
Lowell	Frank B. Kenney	Kitson Machine Co.
Lowell	Nathaniel B. Kerr	Boott Cotton Mills.
Lowell	Alvin S. Lyon	Bigelow Co.
Lowell	Albert H. Morton	Kitson Machine Co.
Lowell	Oliver H. Moulton	Hamilton Manufg. Co.

Lowell	Franklin Nourse	Lawrence Manufg. Co.
Lowell	John W. Pead	Merrimac Manufg. Co.
Lowell	Haven C. Perham	Kitson Machine Co.
Lowell	M. A. Rawlinson	Tremont & Suffolk Mills.
Lowell	Edwin A. Robinson	Tremont and Suffolk Mills.
Lowell	William S. Southworth	Mass. Cotton Mills.
Lowell	Edward W. Thomas	Tremont and Suffolk Mills.
Lowell	Charles T. Upton	63 Mt. Vernon St.
Lowell	Jude C. Wadleigh	Mass. Cotton Mills.
Lowell	Walter S. Watson	Haworth & Watson.
Lowell	Channing Whitaker	Lowell Machine Shop.
Lowell	Nelson Whittier	Whittier Mills.
Lynn	C. J. H. Woodbury	Secy. and Treas.
Malden	John R. Mitchell	134 Dexter St.
Manchaug	Charles M. Holmes	Manchaug Co.
Medford	H. B. Ashton	153 Adams St.
Methuen	Lewis E. Barnes	Pemberton Co. and Methuen Co.
Millbury	Fred W. Moore	Cordis Mills.
Millbury	Henry M. Wilcox	John Rhodes Warp Co.
New Bedford	George A. Ayer	123 Fifth St.
New Bedford	Christopher P. Brooks	New Bedford Textile School.
New Bedford	Robert Burgess	Grinnell Mfg. Corp.
New Bedford	Byron F. Card	Howland Mills.
New Bedford	William W. Crapo	Wamsutta Mills.
New Bedford	Frederick Grinnell	Gen. Fire Extinguisher Co.
New Bedford	Henry A. Holcomb	Box 249.
New Bedford	Thomas Horsfield	95 Bonney St.
New Bedford	Walter H. Langshaw	Dartmouth Manufg. Corp.
New Bedford	Stephen C. Lowe	87 Union St.
New Bedford	Albert R. Pierce	Pierce Mfg. Corporation.
New Bedford	Andrew G. Pierce, Jr.	Box 34.
New Bedford	Frederick W. Reynolds	Potomska Mills.
New Bedford	James O. Thompson	Wamsutta Mills.
New Bedford	Herbert E. Walmsley	Wamsutta Mills.
New Bedford	Lettice R. Washburn	235 North Water St.
New Bedford	William R. West	830 Purchase St.
New Bedford	Benjamin Wilcox	City and Bristol Mfg. Co.
Newton	Josiah G. Coburn	99 Washington St.
Newtonville	Oscar B. Truesdell	18 Washington Terrace.
Newton Upper Falls	Frank J. Hale	Saco and Pettee Machine Shops.
Newton Upper Falls	R. P. Snelling	Saco and Pettee Machine Shops.
North Adams	Hervey Burnham	Beaver Mills and Eclipse Mill.
North Adams	Charles W. Dennett	Johnson Manufg. Co. and Dunbar Mills Co.
North Adams	J. F. Powers	Eagle Mill.
Northbridge	Henry S. Houghton, Jr.	Paul Whitin Manufg. Co.

Northbridge	Henry T. Whitin	Paul Whitin Manufg. Co.
North Cambridge	Colin C. Bell	Laminar Fibre Co.
North Oxford	Edwin N. Bartlett	Sigourney and Rockdale Mills.
North Plymouth	Gideon F. Holmes	Plymouth Cordage Co.
Oakdale	Alfred N. Whiting	L. M. Harris Manufg. Co.
Readville	J. Foster Searles	American Loom Co.
Salem	C. F. Curwen	Dinsmore Mfg. Co.
Salem	William P. McMullen	Naumkeag Steam Cotton Co.
Salem	Nathaniel G. Simonds	Naumkeag Steam Cotton Co.
Saundersville	Thomas Wilmarth	Saunders Cotton Mills.
Shattuckville	Frank S. Field	Massaemit Yarn Mills.
Smithville, Barre	George W. Robbins	White Valley Mills.
South Hadley	Jones S. Davis	Hampshire County.
South Hadley Falls	William R. Hill	Glasgow Manufg. Co.
Springfield	Joseph M. Dunham	43 Edwards St.
Taunton	A. C. Bent	Safety Seamless Pocket Co.
Taunton	William H. Bent	Mason Machine Works.
Taunton	John J. Connell	Cohannet Mills.
Taunton	Peter H. Corr	38 Court St.
Taunton	Thomas G. Cox	Mason Machine Works.
Taunton	P. T. Creed	Hopewell Mills.
Taunton	H. H. Culver	Elizabeth Poole Mills.
Taunton	Henry S. Culver	Westville Cotton Mill.
Taunton	Herbert Fisher	
Taunton	Abbott F. Lawrence	Winthrop Cotton Yarn Co.
Taunton	Henry M. Lovering	Whittenton Manufg. Co.
Taunton	William M. Lovering	Whittenton Manufg. Co.
Taunton	Charles L. Macomber	Winthrop Cotton Yarn Co.
Taunton	John Tempest Meats	Mason Machine Works.
Taunton	Herbert H. Shumway	Corr Manufg. Co.
Taunton	James W. Taylor	Canoe River Mills.
Taunton	Joseph S. Tidd	Oakland Mills.
Thorndike	Charles H. Hobbs	Thorndike Co.
Three Rivers	Roscius C. Newell	Palmer Mill.
Turners Falls	Samuel L. Parker	Turners Falls Cotton Mills.
Waltham	Charles L. Bailey	
Waltham	Charles E. Getchell	35 Willow St.
Waltham	Arthur H. Gulliver	Boston Mfg. Co.
Ware	George E. Tucker	The Otis Co.
Webster	Ernest E. Clark	H. N. Slater Mills.
West Warren	George A. Moody	West Warren Cotton Mills.
Whitinsville	Alfred E. Adams	Whitinsville Cotton Mills and Linwood Mills.
Whitinsville	Josiah M. Lasell	Whitin Machine Works.
Whitinsville	Oscar L. Owen	Whitin Machine Works.
Whitinsville	Cyrus A. Taft	Whitin Machine Works.

Whitinsville	Arthur F. Whitin	Saunders Cotton Mills.
Whitinsville	G. Marston Whitin	Whitin Machine Works.
Williamstown Sta.	Roland R. Kelly	Williamstown Manufg. Co.
Winchendon	Z. L. White	White Brothers.
Worcester	George Crompton	
Worcester	Randolph Crompton	
Worcester	Henry F. Harris	340 Main St.
Worcester	C. H. Hutchins	Crompton & Knowles Loom Works.
Worcester	F. H. Rice	394 Pleasant St.
Worcester	John M. Russell	Crompton & Knowles Loom Works.
Worcester	Justin A. Ware	Crompton & Knowles Loom Works.
Worcester	W. W. White	Holyoke Machine Co.

RHODE ISLAND.

Allenton	R. A. Gray	Rodman Manufg. Co.
Ashton	Charles H. Collins	Berkeley Co.
Bayside	Abel T. Atherton	Machine Maker.
Central Falls	Louis B. Barker	United States Cotton Co.
Central Falls	David Grove	United States Cotton Co.
Central Falls,	B. F. G. Linnell,	Box 645.
Central Falls	O. B. Parker	
Centreville	Harold Lawton	Warwick Mills.
Centreville	Robert B. Treat	Centreville Cotton Mills.
Crompton	Charles D. Robinson	Crompton Co.
Davisville	Walter B. Knight	Reynolds Manufg. Co.
Fiskville	James Gee	Interlaken Dye Works.
Georgiaville	Herbert R. Farnum	Bernon Mills.
Hamilton	Joseph Warren Greene	Hamilton Web Co.
Lonsdale	Edward A. Mongeon	Lonsdale Co.'s Mills.
Manville	A. Tenny White	Manville Co.
Pawtucket	William W. Blades	135 Mineral Spring Ave.
Pawtucket	William P. Dempsey	Dempsey Bleachery & Dye Works.
Pawtucket	John J. Hart	Charlton Manufg. Co.
Pawtucket	David Jackson	Jackson Pat. Shell Roll Co.
Pawtucket	J. E. Jenckes	The E. Jenckes Manufg. Co.
Pawtucket	James R. MacColl	Lorraine Manufg. Co.
Pawtucket	E. R. Richardson	American Machine Co.
Pawtucket	Fred A. Wilde	A. T. Atherton Machine Co.
Peace Dale	William C. Greene	Peace Dale Manufg. Co.
Phenix	Henry R. Brown	Hope Co. and Phenix Mill.
Pontiac	Walter H. Summersby	Pontiac Mill and Bleachery.
Providence	Charles T. Aldrich	Aldrich Manufg. Co.
Providence	William Ames	47 Charles St.
Providence	H. C. Atwood	Williamsville Manufg. Co.
Providence	George R. Babbitt	182 South Water St.

Providence	Edward R. Ballou	189 Charles St.
Providence	Truman Beckwith	Dyerville Manufg. Co.
Providence	J. Frank Braids	212 Weybosset St.
Providence	D. Russell Brown	Brown Bros. Co.
Providence	H. Martin Brown	Brown Bros. Co.
Providence	E. C. Bucklin	Harris Manufg. Co. and Interlaken Mills.
Providence	Fred N. Bushnell	Narragansett Electric Light Co.
Providence	Albert L. Calder, 2nd	P. O. Box 206.
Providence	Charles H. Child	Standard Mill Supply Co.
Providence	Henry C. Clark	Standard Mill Supply Co.
Providence	Frederick I. Dana	Thomas Phillips Co.
Providence	A. Lockwood Danielson	Quinebaug Co.
Providence	J. DeForest Danielson	Lockwood Co. and Lewiston Bleachery and Dye Works.
Providence	John W. Danielson	Lockwood Co. and Ponemah Mills.
Providence	R. H. Deming	10 South Water St.
Providence	F. C. Fletcher	621 Banigan Building.
Providence	J. Herbert Foster	10 South Water St.
Providence	William Gammell	Berkeley Co.
Providence	Rufus B. Goff	77 Exchange Place.
Providence	William S. Granger	Granger Foundry & Machine Co.
Providence	Henry T. Grant, Jr.	723 Banigan Building.
Providence	John H. Hambly	49 Westminster St.
Providence	A. Walter Harris	326 South Water St.
Providence	Elisha H. Howard	309 Butler Exchange.
Providence	John E. Kendrick	American Supply Co.
Providence	Jesse A. Knight	Lawton Spinning Co.
Providence	Stephen A. Knight	Hebron Manufg. Co.
Providence	Webster Knight	Natick Mills.
Providence	W. C. Langford	86 Weybosset St.
Providence	Charles Warren Lippitt	Silver Spring B. & D. Co.
Providence	Henry F. Lippitt	Social and Manville Cos.
Providence	Charles R. Makepeace	Box 973.
Providence	A. T. Malcolmson	C. Bischoff & Co.
Providence	F. H. Maynard	Gen. Fire Extinguisher Co.
Providence	Thomas Mayor	26 Olney St.
Providence	George C. Newell	17 Custom House St.
Providence	William C. Peirce	564 Eddy St.
Providence	Reuben Pilling, Jr.	30 Hudson St.
Providence	Stephen Minot Pitman	Narragansett Mutual Fire Ins. Co.
Providence	Charles A. M. Praray	832-833 Banigan Building.
Providence	Peleg A. Rhodes	P. O. Box 315, also Banigan Bldg.
Providence	Richard H. Rice	521 South Main St.
Providence	Walter Rigby	189 Charles St.
Providence	Louis E. Robinson	34 So. Water St.

Providence	F. C. Sayles	Baltic Power Co.
Providence	Frank P. Sheldon	Industrial Trust Building.
Providence	Harry M. Smith	77 Exchange Place.
Providence	Wilton H. Spencer	3 Exchange Place.
Providence	George W. Stafford	Crompton & Knowles Loom Works.
Providence	H. E. Stafford	Crompton & Knowles Loom Works.
Providence	Daniel J. Sully	T. M. Reynolds & Co.
Providence	Robert Rennie Taft	P. O. Box 1443.
Providence	Robert W. Taft	Coventry Co.
Providence	Charles F. Taylor	21 Eddy St.
Providence	D. M. Thompson	B. B. & R. Knight's Mills.
Providence	James T. Thornton	A. B. Pitkin Machinery Co.
Providence	George E. Tillinghast	Tillinghast, Stiles Co.
Providence	A. Curtis Tingley	7 Eddy St.
Providence	W. O. Todd	621 Banigan Building.
Providence	William P. Vaughan	Banigan Building.
Quidnick	Albert Knight	Quidnick Mills.
Riverpoint	Arthur F. Brackett	Royal Arctic and Valley Queen Mills.
Riverpoint	C. Prescott Knight	Riverpoint Corp.
Valley Falls	Andrew J. Currier	Albion & Valley Falls Co.
Warren	E. A. Rusden	Rusden Machine Co.
Warren	Arnold Schaer	Warren Manufg. Co.
Warren	John Waterman	Warren Manufg. Co.
Westerly	Louis L. Hohn	122 High St.
Woonsocket	Malcolm Campbell	Woonsocket Mach. & Press Co.
Woonsocket	Henry S. Houghton, Sr.	61 Pond St.
Woonsocket	Albert C. Hoy	Hamlet Mills.
Woonsocket	Albert F. Knight	39 Main Street.
Woonsocket	Charles H. Merriman, Jr.	Social Manufg. Co.
Woonsocket	William A. Robinson	Social Manufg. Co.
Woonsocket	Robert Stewart	Hamlet Textile Co.
Woonsocket	Earl A. Thissell	Woonsocket Bobbin Co.
Woonsocket	Charles E. Thomas	44 Prospect St.
Woonsocket	William Whittam, Jr.	Lawton Spinning Co.

CONNECTICUT.

Danielson	James Herbert Smith	Quinebaug Mills.
Hartford	William H. Stratton	95 Pearl St.
Jewett City	James O. Sweet	Ashland Cotton Co.
Jewett City	Adelbert R. Young	Ashland Cotton Co.
Killingly	W. E. Atwood	Williamsville Manufg. Co.
Killingly	C. H. Truesdell	Attawaugan Co.
Montville	Emory S. Rathbun	Pequot Mills.
New Haven	George S. Barnum	The Bigelow Co.

No. Grosvenor Dale	Frank M. Messenger	Grosvenor Dale Co.
Norwich	W. N. Blackstone	Attawaugan Co. and Totokett Mills Co.
Norwich	W. R. Burnham	
Norwich	C. H. Frisbie	Attawaugan Co.
Norwich	W. G. Henderson	Shetucket Co.
Norwich	John F. Reardon	Falls Co.
Norwich	Charles D. White	Uncasville Manufg. Co.
Putnam	George W. Holt	Monohansett Manufg. Co.
Putnam	George A. Vaughan	Putnam Manufg. Co.
Taftville	Joseph D. Aiken	Ponemah Mills.
Taftville	John Eccles	Ponemah Mills.
Wauregan	James A. Atwood	Wauregan Co. & Quinebaug Co.
Wauregan	John Walter Atwood	Wauregan Co.
Willimantic	Dickerson G. Baker	American Thread Co.
Willimantic	E. S. Boss	Willimantic Linen Co.
Windsor Locks	J. R. Montgomery	The J. R. Montgomery Co.

NEW YORK.

Capron	W. H. Cloher, Jr.	Utica Cotton Co.
Chadwicks	Bradford C. Divine	Utica Willow Vale Bleaching Co.
Cohoes	David S. Johnston	Cohoes Iron Foundry & Machine Co.
Cohoes	John R. Mason	237 Main St.
Cohoes	John E. Prest	Harmony Mills.
Jamestown	Thomes Henry Smith	Jamestown Cotton Mill.
New York City	George Arms	Grand Hotel.
New York City	Edwin H. Baker	117 Duane St.
New York City	D. C. Ball	American Cotton Co.
New York City	Percy H. Brundage	290 Broadway.
New York City	J. E. Cheesman	Cheesman Cotton Gin Co.
New York City	John W. Ferguson	Postal Telegraph Building.
New York City	Dudley T. Lyall	541 West 23rd St.
New York City	William L. Lyall	540 West 23rd St.
New York City	Arthur B. Mann	99 Franklin St.
New York City	Arthur Parkinson	13 Gold St.
New York City	Duncan D. Parmly	49 Wall St.
New York City	Vladimir P. Polevoy	120 Broadway.
New York City	John E. Searles	American Cotton Co.
New York Mills, Oneida Co.,	John P. Campbell,	New York Mills.
Oswego	George H. Sayward	Standard Yarn Co.
Utica	George DeForest	Utica Steam Cotton Mills.
Utica	George E. Farrell	Utica Spinning Co.
Utica	D. W. Gray	Skenandoa Cotton Co.
Utica	Henry F. Mansfield	Utica Steam Cotton Mills and Mohawk Valley Cotton Mills.
Utica	John B. Wild	Oneita Knitting Mills.
Victory Mills	Ariel C. Thomas	Saratoga Victory Mfg. Co.

NEW JERSEY.

Gloucester City	Philip H. Fowler	
Gloucester	George W. Turner	Argo Mills.
Jersey City	Ernest Bridge	Jas. Chadwick & Bro. Ltd.
Jersey City	Maxwell Grierson	Jas. Chadwick & Bro., Ltd.
Millville	A. W. Brainerd	May's Landing Water Power Co. and Millville Mfg. Co.
Millville	John K. Russell	Care A. W. Brainerd.
Newark	William H. Loftus	Clark Thread Co.
New Brunswick	William H. Ritter	Johnson & Johnson.

PENNSYLVANIA.

Chester	D. Edwin Irving	The Irving & Leiper Manufg. Co.
Chester	W. T. Galey	Aberfoyle Manufg. Co.
Lancaster	S. S. Spencer	Conestoga Steam Mills.
Mt. Joy	Thomas J. Brown	George Brown's Sons.
Philadelphia	Robert Beatty	Coral and Adams Sts.
Philadelphia	T. Ashby Blythe	114 Chestnut St.
Philadelphia	Alfred H. Burnham	Glasgow Mills.
Philadelphia	Harry W. Butterworth	York and Cedar Sts.
Philadelphia	James Butterworth	York and Cedar Sts.
Philadelphia	Frederick A. Downes	925 Chestnut St.
Philadelphia	Edward W. France	N. W. Cor. Broad and Pine Sts.
Philadelphia	Merrill A. Furbush	428-430 Philadelphia Bourse.
Philadelphia	Joshua Garsed	Wingohocking Mills and National Spinning Co., Frankford.
Philadelphia	John T. Greenwood	4720 Leiper St.
Philadelphia	H. S. Grove	218 Race St.
Philadelphia	W. C. Houston	333 Drexel Building.
Philadelphia	John H. Lorimer	Ontario and Lawrence Sts.
Philadelphia	David Milne	Washington Ave. and 11th St.
Philadelphia	Edward H. Sanborn	48-51 The Bourse.
Philadelphia	Theodore C. Search	32 South Broad St.
Philadelphia	George Wood	626 Chestnut St.
Philadelphia	John P. Wood	Spring Garden and 22nd Sts.
Philadelphia	Oscar W. Wood	Germantown Spinning Co.

DELAWARE.

Wilmington	William P. Bancroft	Joseph Bancroft & Sons Co.
Wilmington	Daniel Moore Bates	Joseph Bancroft & Sons Co.
Wilmington	Charles F. Farrar	Delaware Cotton Co.

MARYLAND.

Baltimore	James A. Gary	108 W. German St.
Baltimore	Charles K. Oliver	346-8 Equitable Bld.
Ilchester	Samuel F. Patterson	Thistle Mills Co.

NORTH CAROLINA.

Charlotte	S. B. Alexander, Jr.	S. B. Alexander, Jr., Co.
Charlotte	R. M. Miller, Jr.	
Charlotte	D. A. Tompkins	D. A. Tompkins Co.
Charlotte	J. P. Wilson	Dover Yarn Mills.
Durham	O. W. Stites	Commonwealth Cotton Mfg. Co.
Fayetteville	Walter L. Holt	Holt-Morgan Mills.
Greensboro	Caesar Cone	Proximity Mfg. Co.
Greensboro	Edward T. Garsed	Hucomuga Mills.
Hope Mills	Frank H. Cotton	Hope Mills Mfg. Co.
Kings Mountain	F. Dilling	Dilling Cotton Mills.
Lincolnton	R. S. Reinhardt	Elm Grove Cotton Mills.
Mountain Island	W. T. Jordan	Mt. Island Manufg. Co.
Winston-Salem	John W. Fries	F. & H. Fries.

SOUTH CAROLINA.

Bath	Henry P. Meikleham	Aiken Mfg. Co.
Charleston	J. Colby Lewis	Vesta Cotton Mills.
Chester	William G. Nichols	Springstein Mills.
Columbia	James Sumter Moore	Olympia & Richland Cotton Mills.
Columbia	W. H. Rose	Cranby Cotton Mills.
Columbia	W. B. Smith-Whaley	1328 Main St.
Gaffney	H. D. Wheat	Gaffney Manufg. Co.
Gaffney	Edward B. Wilbur	Gaffney Mfg. Co.
Graniteville	T. H. Rennie	Graniteville Mfg. Co.
Lancaster	Leroy Springs	Lancaster Cotton Mills.
Langley	Arthur T. Smith	Langley Manufg. Co. and Aiken Manufg. Co.
Newry	Henry D. Martin	Courtenay Mfg. Co.
Orangeburg	Samuel Dibble	The Enterprise Cotton Mills.
Pelham	D. G. Sunderland	The Pelham Mills.
Pelzer	B. F. Guy	Pelzer Manufg. Co.
Pelzer	Ellison A. Smyth	Pelzer Manufg. Co.
Union	T. C. Duncan	Union Cotton Mills.

GEORGIA.

Atlanta	C. E. W. Dow	40 So. Forsyth St.
Atlanta	W. L. Draper	522 Prudential Building.
Atlanta	Oscar Elsas	Fulton Bag and Cotton Mills.
Atlanta	Henry E. Fisher	Atlanta Cotton Mills.
Atlanta	D. E. McGaw	Supply Dept., Southern Belting Co.
Atlanta	William M. Nixon	Atlanta Woolen Mills.
Atlanta	James R. Pearce	Fulton Bag and Cotton Mills.
Augusta	Thomas Barrett, Jr.	Langley & Aiken Mills.
Augusta	John W. Chaffee	The Sibley Mfg. Co.

Augusta	Charles Estes	John P. King Mfg. Co.
Augusta	Arthur C. Freeman	Box 208
Augusta	Otis G. Lynch	Enterprise Manufg. Co.
Augusta	Joel Smith	J. P. King Mfg. Co.
Augusta	George R. Stearns	Riverside Mills.
Augusta	Eugene F. Verdery	Warren Mfg. Co.
Augusta	James P. Verdery	Enterprise Mfg. Co.
Chattahoochee	W. R. B. Whittier	Whittier Mills.
Columbus	E. N. Clemence	Eagle & Phenix Mills.
Columbus	Frederick B. Gordon	Columbus Mfg. Co.
Columbus	Charles H. Gorton	Columbus Mfg. Co.
Griffin, Spalding Co.	Albert G. Martin	Kincaid Manufg. Co.
Lindale	Edward C. Beach	Mass. Mills In Georgia.
Macon	W. H. Richmond	Bibb Mill No. 2.
Macon	Broadus E. Willingham	Willingham Cotton Mills.

TENNESSEE.

Knoxville	William T. Lang	Brookside Mills.
Memphis	C. C. Cowan	372 Front St.
Memphis	Jerome Hill	334 Front St.
Nashville	T. B. Dallas	Phoenix Cotton Mills, Dallas Mfg. Co.

MISSISSIPPI.

Agricultural College,	Arthur Whittam	Miss. Agricultural and Mechanical College.

LOUISIANA.

New Orleans	S. Odenheimer	Lane Mills.

KENTUCKY.

Henderson	Paul J. Marrs	Henderson Cotton Mills.
Louisville	Philip S. Tuley	Louisville Cotton Mills Co.

ALABAMA.

Birmingham	B. B. Comer	Avondale Cotton Mills.
Cordova	Joseph O. Hannum	Indian Head Mills of Ala.
Huntsville	A. W. Hunking	Merrimack Mfg. Co.
Huntsville	T. W. Pratt	West Huntsville Cotton Mill Co.
Langdale	Charles M. Sears	West Point Mfg. Co.

TEXAS.

Galveston	Lawrence V. Elder	212 Tremont St.

CANADA.

Province of Ontario.

Hamilton, Ont.	Charles Owen Dexter	The Canadian Colored Cotton Mills Co., Ltd.
Cornwall	S. Greenwood	The Canadian Colored Cotton Mills Co. Ltd.
Hamilton, Ont.	James M. Young	Hamilton Cotton Co.
Ottawa	Louis Simpson	Victoria Chambers.

Province of Quebec.

Hochelaga, P. Q.	W. S. Hume	176 Notre Dame St.
Montreal, P. Q.	Alfred Hawkesworth	Merchants Cotton Co.
Montreal, P. Q.	Fred Hawkesworth	Merchants Cotton Co.
Montreal, P. Q.	D. K. McLaren	751 Craig St.
Valleyfield, P. Q.	Fred Lacey	Montreal Cotton Co.

NEW BRUNSWICK.

Marysville	John B. Cudlip	Gibson Cotton Mills.
Milltown	Lewis Dexter, Jr.	The Canadian Colored Cotton Mills Co., Ltd.
Milltown	Farquharson J. Muir	The Canadian Colored Cotton Mill Co., Ltd.
St. John	John H. Parks	Wm. Parks & Son, Ltd.

ENGLAND.

Huddersfield	John Sykes	English Card Clothing Co.

RECAPITULATION.

LOCATION OF MEMBERSHIP.

Maine	20
New Hampshire	29
Vermont	1
Massachusetts	299
Rhode Island	109
Connecticut	24
New York	27
New Jersey	8
Pennsylvania	23
Delaware	3
Maryland	3
North Carolina	13
South Carolina	17
Georgia	24
Tennessee	4
Mississippi	1
Louisiana	1
Kentucky	2
Alabama	5
Texas	1
Province of Ontario	4
Province of Quebec	5
New Brunswick	4
England	1
	628

IN MEMORIAM.

JOHN HOLLAND.

JOHN HOLLAND died at his home in Dover, N. H. on May 29, 1900, after a long continued illness which brought to a close a busy life of 69 years.

He was born in Padiham, Lancashire County, England, May 1, 1831, and came to this country at the age of 20 years. After engaging in other occupations, he entered a cotton mill at Taunton where he was finally superintendent, from which place he became superintendent of the Cocheco Manufacturing Co. at Dover, and later became agent of these mills until failing health prevented the exercise of his duties.

He was a respected citizen and held membership on the boards of the Savings Bank, Public Library and Navigation Company. He was a member of the Masonic Order, the American Society of Mechanical Engineers and the Textile Club of Boston. He became a member of this Association October 31, 1877.

WINTHROP THAYER.

WINTHROP THAYER was born in Boston November 23, 1863, and died July 18, 1900.

His first business was in connection with the dry goods commission house of Upham, Tucker & Co. and he then became connected with the Babcock & Wilcox Boiler Co. for about five years, when he took the position of assistant superintendent of the Wainwright Manufucturing Co. at Medford, Mass., but in two years he resumed his connection with the Babcock & Wilcox Co. as New England manager until July 1895, when he became president of the firm of Thayer & Co., Incorporated, in the manufacture of water tube boilers, in which business he was very successful.

He was fond of social life and a member of numerous clubs and organizations, among which were the Masons, the American Society of Mechanical Engineers, Engineers, and Manhattan Clubs of New York, the Algonquin, Exchange and Athletic Clubs of Boston, the Newton Club and Vice-Commodore of the Hull Yacht Club. He became an associate member of the New England Cotton Manufacturers' Association October 29, 1896.

The immediate cause of his death was an attack of typhoid fever while on a pleasure trip in Mexico, and this was followed by an attack of pneumonia, which left him in such an impaired condition that upon his return North in June, he was unable to rally from prostration caused by severely hot weather.

STEPHEN L. ADAMS.

STEPHEN L. ADAMS died at his home in Central Falls, R. I., on August 11, 1900, at the age of 50 years.

He took an active interest in public affairs, particularly in connection with the public schools in which work he was chairman of the school committee. In his will he bequeathed $35,000 for a free public library for Central Falls, and other bequests for religious objects.

He was a member of the Masons, the Pawtucket Business

Men's Association and the Pomham Club. He became a member of the New England Cotton Manufacturers' Association April 24, 1895.

MOSES PIERCE.

MOSES PIERCE died at his home in Norwich, Conn., August 18, 1900, at the advanced age of 92 years.

He was born at Pawtucket, R. I., July 3, 1808 and began his work in a cotton mill at the early age of 12 and at the age of 20 took charge of a cotton mill in Willimantic, Conn., and was later connected with mills at Fall River, Mass., and at Pontiac, R. I. In the latter place he became interested in the finishing of cotton goods, and in 1839 came to Norwich and with others established the Norwich Bleaching, Dyeing and Printing Co., of which he was in active control as president of the corporation until 1888, when he sold his interest in the establishment and retired from the active charge.

In 1866, with others, he founded the Ponemah Mills at Taftville, Conn., in which he was actively interested for 20 years. At the time that he withdrew from the Norwich Bleaching, Dyeing and Printing Co. he became interested in the Ashland Company at Jewett City, and designed and built a mill there at the advanced age of 87. He was at one time a director of the Norwich and Worcester Railroad and two banks in Norwich and for 11 years was president of the Norwich and New York Transportation Co. He was very much interested in the development of the textile art, particularly in the finishing of goods, and made frequent trips to Europe where his large acquaintance among manufacturers enabled him to avail himself of the most recent practice. He was deeply interested in education, was for many years a member of the corporation of the Norwich Free Academy and contributed liberally to benevolent and educational interests.

He was a Fellow of the American Geographical Society, a member of the Metropolitan Museum of New York City, the Home Market Club and the New England Cotton Manufacturers' Association, which he joined October 30, 1878, and was made an honorary member of the Association April 26, 1900.

His interest in textile education was shown by his donation to the Association of a fund which is to be used for the award of medals to meritorious graduates of textile schools.

He retained his vigor of mind and body, and up to the time of his death, and a few weeks before, was known to be engaged upon writing his reminiscences of early days of cotton manufacturing at Pawtucket, but as the manuscript has not been found, it is supposed that his modest expressions of dissatisfaction with the article caused him to destroy it for the purpose of writing it anew.

It was his fortune to be associated with the pioneers of cotton manufacturing in the United States, to share in its prosperity and to live until it has developed to one of the leading industries of the country.

ARBA COVEL SLATER.

ARBA COVEL SLATER died at his home in Linwood, Mass., on the evening of Sept. 3, 1900. He was born in East Killingly, Conn., April 19, 1824.

His education was limited to that obtainable in the district schools in those days — two terms a year until he was of an age to be useful on the farm; then the winter term was his only source of book knowledge. But he made good use of what knowledge he had, always exhibiting in study the same untiring devotion that he otherwise displayed in manual labor. In his 21st year he entered a cotton factory at Stafford Springs, Conn., learning to run a dresser. For several years he was overseer of

dressing in mills at Newton Upper Falls, Mass., and Portsmouth, N. H. In the spring of 1853, he went to Lyman Mills, Holyoke, as outside superintendent. The mills shutting down at the outbreak of the Rebellion, he went into the armory at Springfield where he remained until the spring of 1864. He then went to Olneyville, R. I., to assist in starting the new Atlantic Delaine mill. He began as overseer but was soon made assistant superintendent. In the fall of 1867 he became superintendent of the Linwood Mill at Whitins Station, which position he held 33 years. His relations with his employers and employees have always been pleasant, their love and respect being secured and held by his ability, common sense and faithful devotion to their interests.

Mr. SLATER represented Holyoke in the House of Representatives in 1855 and was selectman in 1860. He has been a trustee of the Public Library and was vice-president of the Savings Bank in Uxbridge, Mass., for many years. In the Masonic fraternity, he has been Master in Mt. Tom lodge, Holyoke, and Solomon's Temple Lodge, Uxbridge, Mass. He was three years Deputy Grand Master of the 12th Masonic District.

Mr. SLATER was twice married; in 1844 to LUCY CLARK AVERY of Killingly, Conn. Mrs. SLATER died January 9, 1888, leaving no children. In 1889, he married ELLA M. POTTER PIERCE, who survives him, with one adopted step-daughter, Miss ETHEL WINIFRED SLATER.

Mr. SLATER was a member of the North Uxbridge Baptist church, of which he was a deacon many years, and held many positions of responsibility and trust. He was always deeply interested in the welfare of mankind, especially the poor. No deserving person ever failed to enlist his interest and sympathy. He was always generous, genial and kind, having few enemies, if any, and hosts of friends.

He became a member of the Association January 15, 1868, and always took deep interest in its meetings, which he attended regularly until his health prevented.

The funeral took place Thursday, September 6, 1900, from the North Uxbridge Baptist Church, North Uxbridge, Mass.

JAMES RENFREW.

JAMES RENFREW died at his home in Adams, Mass., September 28, 1900. He was born near Barr Head, Renfrewshire, Scotland, August 18, 1840. He came to Adams, Mass., when nine years of age, and after completing his school course, became a bookkeeper at the Taconic Mills, Springfield. In 1864 he went to the Broadley Mill at Adams, Mass., and later became its superintendent. He later, with others, formed the Renfrew Manufacturing Co., which purchased this property, and he was made manager and afterwards treasurer of the corporation, which has been very largely increased until it became one of the largest manufactories of gingham in the country.

His characteristic of adopting all of the improvements pertaining to the business is shown in the radical manner in which he availed himself of new methods in the successive mill buildings constructed by that corporation.

He took a keen interest in public affairs from those of his town to those of his nation. He held numerous positions of trust and responsibility as president of the National Bank, trustee of the Savings Bank, director of the Fitchburg Railroad, president of the Holyoke Warp Co. and was a member of the Masons. He became a member of the New England Cotton Manufacturers' Association October 18, 1871.

PROCEEDINGS.

In accordance with the legal notice, the stated semi-annual meeting of the Association was held at the Arlington Hotel, Washington, D. C., October 16-18, 1900. The following 223 members and guests were present.

ACTIVE MEMBERS.

JOSEPH D. AIKIN, Taftville, Conn.
DANIEL MOORE BATES, Wilmington, Del.
ROBERT BEATTY, Philadelphia, Pa.
T. ASHBY BLYTHE, Philadelphia, Pa.
FRANK A. BOWEN, Lowell, Mass.
HENRY R. BROWN, Phenix, R. I.
WILLIAM D. CADWELL, Nashua, N. H.
CHARLES H. COLLINS, Ashton, R. I.
FRANK H. COTTON, Hope Mills, N. C.
H. H. CULVER, Taunton, Mass.
CHARLES W. DENNETT, North Adams, Mass.
EDWARD P. DENNIS, Lowell, Mass.
GEORGE E. FARRELL, Utica, N. Y.
CHARLES H. FISH, Dover, N. H.
FREDERICK A. FLATHER, Lowell, Mass.
F. C. FLETCHER, Providence, R. I.
M. F. FOSTER, Milford, N. H.
JOHN W. FRIES, Winston-Salem, N. C.
EDWARD T. GARSED, Greensboro, N. C.
CHARLES H. GORTON, Columbus, Ga.

George P. Grant, Jr., Fitchburg, Mass.
D. W. Gray, Utica, N. Y.
R. A. Gray, Allenton, R. I.
S. Greenwood, Cornwall, Ontario.
John Gregson, Fiskdale, Mass.
Z. D. Hall, Adams, Mass.
John F. Hamlet, Fall River, Mass.
William B. Hawes, Fall River, Mass.
Alfred Hawkesworth, Montreal, P. Q.
Fred Hawkesworth, Montreal, P. Q.
James G. Hill, Lowell, Mass.
Charles H. Hobbs, Thorndike, Mass.
George W. Holt, Putnam, Conn.
Stephen A. Knight, Providence, R. I.
Webster Knight, Providence, R. I.
Walter H. Langshaw, New Bedford, Mass.
Evan Arthur Leigh, Boston, Mass.
Arthur H. Lowe, Fitchburg, Mass.
Thomas Mayor, Providence, R. I.
John Tempest Meats, Taunton, Mass.
Henry P. Meikleham, Bath, S. C.
J. R. Montgomery, Windsor Locks, Conn.
William G. Nichols, Chester, S. C.
Walter E. Parker, Lawrence, Mass.
Haven C. Perham, Lowell, Mass.
J. E. Prest, Cohoes, N. Y.
T. H. Rennie, Graniteville, S. C.
Edward H. Sanborn, Philadelphia, Pa.
Arnold Schaer, Warren, R. I.
Charles M. Sears, Langdale, Ala.
Thomas C. Sheldon, Fitchburg, Mass.
William F. Sherman, Boston, Mass.
J. C. Smith, Fall River, Mass.
Thomas Henry Smith, Jamestown, N. Y.
S. S. Spencer, Lancaster, Pa.
George E. Spofford, Blackstone, Mass.
Henry B. Sprague, Lynn, Mass.
Leroy Springs, Lancaster, S. C.
D. G. Sunderland, Pelham, S. C.

EDWARD W. THOMAS, Lowell, Mass.
D. M. THOMPSON, Providence, R. I.
D. A. TOMPKINS, Charlotte, N. C.
GEORGE W. TOWNE, Lawrence, Mass.
OSCAR B. TRUESDELL, Newtonville, Mass.
GEORGE W. TURNER, Gloucester, N. J.
HERBERT E. WALMSLEY, New Bedford, Mass.
JOSEPH WATTERS, Fall River, Mass.
JOSEPH W. WATTLES, Canton Junction, Mass.
CHARLES D. WHITE, Norwich, Conn.
Z. L. WHITE, Winchendon, Mass.
ALFRED N. WHITING, Oakdale, Mass.
GEORGE F. WHITTEN, Manchester, N. H.
W. R. B. WHITTIER, Chattahoochee, Ga.
JOHN B. WILD, Utica, N. Y.
BROADUS E. WILLINGHAM, Macon, Ga.
C. J. H. WOODBURY, Lynn, Mass.

ASSOCIATE MEMBERS.

S. B. ALEXANDER, JR., Charlotte, N. C.
EUGENE C. ANDRES, Boston, Mass.
GEORGE R. BABBITT, Providence, R. I.
EDWIN BARNES, Boston, Mass.
F. H. BISHOP, Boston, Mass.
HENRY G. BRINCKERHOFF, Boston, Mass.
JOHN H. BURGHARDT, Boston, Mass.
JAMES BUTTERWORTH, Philadelphia, Pa.
THOMAS G. COX, Taunton, Mass.
W. L. DRAPER, Augusta, Ga.
C. E. W. DOW, Atlanta, Ga.
T. C. ENTWISTLE, Lowell, Mass.
ROYAL W. GATES, LOWELL, Mass.
SUMNER S. GOULD, Lowell, Mass.
ARTHUR F. GRAY, Boston, Mass.
RICHARD H. HILL, Boston, Mass.
ALFRED K. HOBBS, Manchester, N. H.
JOHN E. KENDRICK, Providence, R. I.
FRANK B. KENNEY, Lowell, Mass.
STEPHEN C. LOWE, New Bedford, Mass.

D. E. McGaw, Atlanta, Ga.
H. G. McKerrow, Boston, Mass.
John R. Mitchell, Malden, Mass.
William R. Noone, Boston, Mass.
Sidney B. Paine, Boston, Mass.
Arthur Parkinson, New York, N. Y.
E. R. Richardson, Pawtucket, R. I.
H. E. Stafford, Providence, R. I.
James Strang, Indian Orchard, Mass.
John Sykes, Huddersfield, England.
James T. Thornton, Providence, R. I.
Rienzi W. Thurston, Fall River, Mass.
George E. Tillinghast, Providence, R. I.
Allison W. Trafford, Fall River, Mass.
Justin A. Ware, Worcester, Mass.
W. W. White, Worcester, Mass.
Fred A. Wilde, Pawtucket, R. I.

GUESTS.

George E. Alexander, Providence, R. I.
J. B. Allen, Atlanta, Ga.
Benjamin Anthony, New Bedford, Mass.
S. B. Ashley, Fall River, Mass.
W. W. Ballagh, New York, N. Y.
George B. Blacker, Philadelphia, Pa.
E. E. Blake, Newton Highlands, Mass.
J. J. Bradley, Marion, S. C.
J. H. Bragdon, New York, N. Y.
George H. Burgess, Boston, Mass.
Frank H. Burt, Boston, Mass.
Col. D. Cardwell, Columbia, S. C.
L. A. Carpenter, Maiden, N. C.
Frank H. Carron, Hope Mills, N. C.
Eugene B. Clark, Washington, D. C.
J. D. Clouder, Atlanta, Ga.
M. H. Coffin, Whitinsville, Mass.
James A. Cooper, Whitinsville, Mass.
S. S. Dale, Boston, Mass.
Charles Warren Davis, Augusta, Ga.

R. H. Edmonds, Baltimore, Md.
Lyster H. Dewey, Washington, D. C.
J. P. Eddy, Providence, R. I.
Walter H. Evans, Ph. D., Washington, D. C.
Hon. Lyman Gage, Washington, D. C.
P. Gillan, Fall River, Mass.
J. E. Hays, Boston, Mass.
A. O. Hewitt, Boston, Mass.
George F. Heywood, Providence, R. I.
John Hill, Atlanta, Ga.
George B. Hiss, Charlotte, N. C.
Frank H. Hitchcock, Washington, D. C.
W. C. Houston, Jr., Philadelphia, Pa.
Carroll Hutchins, Boston, Mass.
Richard Johnson, Oldham, England.
T. C. Johnston, Philadelphia, Pa.
A. W. Jones, Atlanta, Ga.
Joseph C. King, Boston, Mass.
Henry G. Kittredge, Boston, Mass.
William M. Kendrick, Augusta, Ga.
H. B. Lincoln, Worcester, Mass.
Hon. John D. Long, Washington, D. C.
J. H. Mays, Charlotte, N. C.
E. L. McKerrow, Providence, R. I.
P. J. Meaney, New York, N. Y.
Rear Admiral George W. Melville, Washington, D. C.
H. Monroe, Boston, Mass.
F. I. Nichols, Fitchburg, Mass.
S. S. Nostrand, New York, N. Y.
W. F. Nostrand, New York, N. Y.
William A. Orton, Washington, D. C.
R. H. Pettus, Charlotte, N. C.
J. Harper Poor, New York, N. Y.
Dr. Henry S. Pritchett, Boston, Mass.
C. H. Purse, Charlotte, N. C.
M. V. Richards, Washington, D. C.
S. I. Roberts, Danville, Va.
Charles H. Sammons, Charlotte, N. C.
W. F. Savage, New York, N. Y.

J. J. Shiers, Handfort, England.
Charles H. Sites, New York, N. Y.
James W. Switzer, Washington, D. C.
B. S. Terry, Providence, R. I.
W. W. Toll, Boston, Mass.
George W. Tyner.
Frank M. Walters, Fall River, Mass.
George T. Wattles, Canton Junction, Mass.
Dr. H. J. Webber, Washington, D. C.
William Welch, Hopedale, Mass.
James N. Williamson, Durham, N. C.
Hon. James Wilson, Washington, D. C.
Philip Worth, Providence, R. I.
Hon. Carroll D. Wright, Washington, D. C.
Mrs. Benjamin Anthony, New Bedford, Mass.
Mrs. Robert Beatty, Philadelphia, Pa.
Mrs. E. E. Blake, Newton Highlands, Mass.
Mrs. Henry G. Brinckerhoff, Boston, Mass.
Mrs. Frank A. Bowen, Lowell, Mass.
Mrs. M. F. Briggs, Chicago, Ill.
Miss B. S. Brown, Lynn, Mass.
Miss E. W. Butterworth, Philadelphia, Pa.
Mrs. Charles H. Collins, Ashton, R. I.
Mrs. James A. Cooper, Whitinsville, Mass.
Mrs. H. H. Culver, Taunton, Mass.
Mrs. George Ross Eshleman, Lancaster, Pa.
Mrs. George W. Holt, Putnam, Conn.
Mrs. William M. Kendrick, Augusta, Ga.
Mrs. Frank B. Kenney, Lowell, Mass.
Miss Josephine L. Mason.
Mrs. John T. Meats, Taunton, Mass.
Mrs. Walter E. Parker, Lawrence, Mass.
Mrs. Haven C. Perham, Lowell, Mass.
Mrs. J. E. Prest, Cohoes, N. Y.
Miss Jessie Prest, Cohoes, N. Y.
Mrs. T. H. Rennie, Graniteville, S. C.
Mrs. J. C. Smith, Fall River, Mass.
Mrs. S. S. Spencer, Lancaster, Pa.
Mrs. H. B. Sprague, Lynn, Mass.

Mrs. Rienzi W. Thurston, Fall River, Mass.
Mrs. A. W. Towne, Lawrence, Mass.
Mrs. Allison W. Trafford, Fall River, Mass.
Mrs. Herbert E. Walmsley, New Bedford, Mass.
Mrs. William Welch, Hopedale, Mass.
Mrs. W. W. White, Worcester, Mass.
Mrs. W. R. B. Whittier, Chattahoochee, Ga.
Mrs. Fred A. Wilde, Pawtucket, R. I.
Mrs. James N. Williamson, Durham, N. C.
Mrs. Broadus E. Willingham, Macon, Ga.
Mrs. C. J. H. Woodbury, Lynn, Mass.
Miss Alice P. Woodbury, Lynn, Mass.

PRELIMINARY NOTICE.

BOSTON, MASS., September 4, 1900.

The sixty-ninth meeting of the New England Cotton Manufacturers' Association will be held in the hall of the Arlington Hotel, Washington, D. C., beginning on the evening of Tuesday, October 16, when it will be welcomed by members of the Cabinet and others prominent in official life. The sessions will continue during the next two days and be arranged so as to give members and guests individual opportunities for seeing the various points of interest at Washington.

Tickets for the round trip from Boston, including all charges except meals on the Long Island Sound Steamers, can be obtained from Messrs. Raymond & Whitcomb, 296 Washington St., Boston, for $33.00. Those buying tickets from other points may obtain a reduction of one-third on the return fare, if at the time of purchasing a ticket a certificate of such purchase is obtained from the ticket agent, provided that one hundred members and their guests attend the meeting.

The formal call to the meeting will be issued late in September.

C. J. H. WOODBURY, *Secretary.*

Blank propositions for membership are on the inside of the front cover of the Transactions.

FIRST SESSION.

ARLINGTON HOTEL, WASHINGTON, D. C.
Tuesday, October 16, 1900.

Meeting called to order at 8 P. M., President D. M. THOMPSON in the chair.

The PRESIDENT. Gentlemen, you will please come to order. We have assembled here this evening for a convention of the New England Cotton Manufacturers' Association, its sixty-ninth meeting. The session is now in order and awaits the Secretary's report.

The Secretary read the following call to the meeting.

CALL TO SEMI-ANNUAL MEETING, NO. 69,
WASHINGTON, D. C.

BOSTON, MASS., September 20, 1900.

To the Members:

Notice is hereby given that the stated semi-annual meeting of this Association will be held at Washington, D. C., Tuesday, Wednesday and Thursday, October 16, 17 and 18, 1900.

The sessions will be held in the hall of the Arlington Hotel on Lafayette Square, beginning at 8 P. M. on Tuesday evening. The sessions on the following days will be at 2.30 P. M. and 8 P. M.

By order of the Board of Government,

C. J. H. WOODBURY,
Secretary.

The transportation and hotel accommodations will be under the charge of Messrs. Raymond & Whitcomb, No. 296 Washington Street, Boston. Members with ladies and other guests can leave Boston at 6.00 P. M., by the Fall River Line on Monday, October 15. An annex boat will meet the Long Island Sound boats at their pier and convey the party to a special train of parlor cars which will leave Jersey City via the Royal Blue Line, and stopping for members at Chestnut Street Station, Philadelphia, Wilmington, and at Mt. Royal Station, Baltimore, will arrive at Washington at 1.40 P. M. on Tuesday, October 16. Those who join the party at New York will start from Liberty Street Ferry at 8.00 A. M.

On the return, the party will leave Washington at 8.30 A. M. on Friday the 19th, arriving at Jersey City at 1.30 P. M., where lunch will be served before taking the ferry for New York. This will permit the party to spend four hours in New York City before leaving by Fall River Line Steamer at 5 P. M. from foot of Warren Street, North River, reaching Boston early on the morning of Saturday, October 20. The price of tickets from Boston to Washington and return, including hotel and all necessary traveling expenses and care of checked baggage, excepting meals on the Long Island Sound Steamers, will be $33.00. Messrs. Raymond & Whitcomb will quote prices for round trip tickets from other points north of Washington.

Those who do not buy their tickets through Messrs. Raymond & Whitcomb will please obtain a certificate of the purchase of the ticket from the ticket agent (do not make the mistake of asking for a receipt), and this will enable the return tickets to be bought at one-third the regular rate if one hundred members and guests obtain such certificates and have them endorsed at Washington by a representative of the railroads, who will be in attendance at the meeting all day on Thursday, the 18th. This reduction applies to all who attend, whether from Boston or other points.

Information will be given at the meeting in case there are any complimentary excursions tendered to the members.

The sessions will be held in the afternoon and evening, in order to afford the members opportunities to visit many points of public interest in Washington, of which the following are shown on the accompanying map.

Building.	Location.	Open. A. M.	P. M.
Agricultural Department,	Mall, 12th and 14th Sts., S. W.	9.00 to	4.00
Arsenal,	Foot of 4½ St., S. W.	All day.	
Botanical Garden,	Pennsylvania Ave. and 1st St.,	8.00 to	5.00
Bureau of Engraving,	14th and B Sts., S. W.,	9.00 to	2.30
But visitors are not conducted by guides between 11.45 and 12.30.			
Capitol,	Capitol Hill,	9.00 to	4.30
Census Office, Electric Tabulating Machinery.	B and 2nd Sts., N. W.,	9.00 to	2.00
Corcoran Gallery,	Pennsylvania Ave. and 17th St.,	9.30 to	4.00
Government Printing Office,	North Capitol and H Sts.,	10.00 and	2.00
Halls of the Ancients,	N. Y. Ave. between 13th and 14th Sts.	9.00 to	4.00
Library of Congress,	Capitol Hill,	9.00 to	10.00
Lincoln Museum,	No. 516 10th St.,	All day.	
Marine Barracks,	8th and G Sts., S. E.,	All day.	
Mount Vernon,	Steamboat at 7th and M Sts. or by trolley from 13½ St. and Pennsylvania Ave.	11.00 to	4.00
National Museum,	Smithsonian Grounds,	9.00 to	4.00
Navy Department,	Pennsylvania Ave. and 17th St.,	9.00 to	2.00
Navy Yard,	Foot of 8th St., S. E.,	9.00 to sunset	
Patent Office,	7th and F Sts.,	9.00 to	2.00
Pension Bureau,	F and 4th Sts.,	9.00 to	4.00
Post Office Department,	Pennsylvania Ave. and 11th St.,	9.00 to	2.00
Smithsonian Institution,	Smithsonian Grounds,	9.00 to	4.00
Soldiers' Home,	Near 7th St. extended,	9.00 to sunset	
State Department,	Pennsylvania Ave. and 17th St.,	9.00 to	2.00
Treasury,	Pennsylvania Ave. and 15th St.,	9.00 to	2.00
Treasury Tours between 10.30 and 12.00, and 1.00 and 2.00.			
War Department,	Pennsylvania Ave. and 17th St.,	9.00 to	2.00
Washington Monument,	Washington Park near 14th St., Elevator runs 9.30 to 4.30.	9.30 to	5.30
White House, East Room,	Pennsylvania Ave. and 16th St.,	10.00 to	2.00
Zoological Park,	Rock Creek, reached by Chevy Chase cars direct from Treasury.	All day.	

The principal guide books of Washington are the Pictorial Guide of the City of Washington, published by Rand, McNally & Co., and the Washington Standard Guide, published by Foster & Reynolds, to be obtained of book-sellers generally, at twenty-five cents each.

The meeting promises to be a very interesting one. At the first session on Tuesday evening, addresses of welcome will be made by members of the Cabinet and others prominent in official life and at some time during the subsequent two days the members may have an opportunity to receive further consideration.

Papers are expected on the following subjects, but the detailed programme will not be issued until the meeting.

Cotton Mill Accounting.
Markets for American Goods.
Our Cotton Export Trade with China.
American-grown Egyptian Cotton.
The Cotton Plant.
Southern Industrial Development.
Practical Experiences with the Round Bale.
The Uses of Cotton Waste.
Putting Up of Yarns for Use and for Market.
New Methods of Combing Cotton.
Yarn Testing and Testing Machines.
The Development of Textile Patterns in Former Centuries.
The Paris Conference on Standard Yarn Numbering.
Friction Clutches.
The Use of Stationary Cells in Place of Rotating Cylinders in the Drying of Textile Fabrics.
Whimsicalities in Cotton Mills.

The souvenir badges will be given to those members who are in attendance, and the Board of Government has given instructions that duplicates shall not be given until after the adjournment, but other souvenir badges will be given to the guests of members.

It is desired that applications for membership shall be received as far as possible in advance of the meetings. Blank propositions may be found on the inside cover of the Transactions, or will be sent on application. Candidates for membership will be invited by the Board of Government as guests of the Association.

Members who have overlooked their postal card receipts for Transactions are requested to give the matter attention, as it is only through this means that the headquarters of the Association are able to know that members receive the volumes and notices to which they are entitled.

The SECRETARY. In accordance with Article 14 of the by-laws I certify that this call was mailed to each member at least ten days in advance of the meeting, and that a quorum is now present. The notice was sent to members in full and the programme is as follows:

SEMI-ANNUAL MEETING, NO. 69, ARLINGTON HOTEL, WASHINGTON, D. C., OCTOBER 16-18, 1900.

PROGRAMME.

First Session, Tuesday, October 16, 1900, at 8 P. M.

Call to Order.

Welcome to the Association.

HON. LYMAN GAGE, Secretary of the Treasury.
HON. JOHN D. LONG, Secretary of the Navy.

The Factory as an Element in Social Life.

Hon. CARROLL D. WRIGHT,
Chief U. S. Bureau of Labor Statistics, Washington, D. C.

President's Address.

D. M. THOMPSON, Providence, R. I.

Wednesday, October 17, 1900, at 11.30 A. M.

Reception to the New England Cotton Manufacturers' Association at the Executive Mansion, by WILLIAM MCKINLEY, President of the United States.

Second Session, Wednesday, October 17, 1900, at 2.30 P. M.

The Cotton Plant.

WALTER H. EVANS, Ph. D.
U. S. Dept. of Agriculture, Washington, D. C.

American-grown Egyptian Cotton.

LYSTER H. DEWEY,
U. S. Dept. of Agriculture, Washington, D. C.

America's Textile Industry,—A Southern View.

R. H. EDMONDS, Baltimore, Md.

The Possibility of Cotton Manufacturing in the United States and Especially in the South.

R. M. MILLER, JR., Charlotte, N. C.

Third Session, Wednesday, October 17, 1900, at 8 P. M.

Address.

HON. JAMES WILSON, Secretary of Agriculture.

Improvement of Cotton.

H. J. WEBBER,
U. S. Dept. of Agriculture, Washington, D. C.

The Use of Stationary "Cells" in Place of Rotating Cylinders in the Drying of Textile Fabrics.

CHARLES H. FISH, Dover, N. H.

Uses of Cotton Waste.

EDWARD W. THOMAS, Lowell, Mass.

Putting Up of Yarns for Use and for Market.

F. H. BISHOP, Boston, Mass.

Yarn Testing and Testing Machines.

GEORGE R. SMITH, Ossett, near Leeds, England.

Fourth Session, Thursday, October 18, 1900, at 2.30 P M.

Markets for American Goods.

D. A. TOMPKINS, Charlotte, N. C.

Our Cotton Export Trade With China.

DANIEL MOORE BATES, Wilmington, Del.

Friction Clutches.

RICHARD H. HILL, BOSTON, MASS.

New Methods of Combing Cotton.

H. G. MCKERROW, Boston, Mass.

New Methods of Combing Cotton.

E. W. ATKINSON, Boston, Mass.

Fifth Session, Thursday, October 18, 1900, at 8 P. M.

Election of Members.

Address.

REAR ADMIRAL GEORGE W. MELVILLE,
Engineer in Chief, United States Navy, Washington, D. C.

Development of Textile Patterns in Former Centuries.

Prof. PAUL SCHULZE,

Director of the Royal Textile Museum, Crefeld, Germany.

Members are requested to give their Trunk Line certificates of the purchase of tickets to the Secretary, who will procure the official endorsement and return them, which will enable the owners to obtain return tickets by the same route within seven days after the adjournment of the meeting at one-third the price of the original ticket.

The Southern Railway, through Mr. M. V. RICHARDS, Land and Industrial Agent, extends to the members of the Association at the Washington Meeting the courtesy of a special train over their lines, starting on Thursday evening, October 18, after the adjournment, for a trip of about five or six days, from Washington to Birmingham, Alabama, and return, a distance of about 1800 miles, stopping at many of the important cotton manufacturing centers, passing Sunday at either Asheville or Atlanta. The details of the itinerary will be given at the session on Wednesday afternoon, October 17th. The only charges for the trip will be for meals and for hotel accommodations on such nights as are not passed in the sleeping car.

The Board of Government reserve the privilege of changing the programme if in their opinion the interests of the Association or local arrangements require modification in the foregoing.

The records of the last meeting were read by the Secretary and accepted.

The SECRETARY. The Board of Government submit the following:

The Association received the following letter from Mr. MOSES PIERCE, of Norwich, Conn., Honorary Member of the Association:

NORWICH, CONN., July 2, 1900.

C. J. H. WOODBURY, ESQ., *Treas.*,

New England Cotton Manufacturers' Association.

Dear Sir — Herewith please find my check for the benefit of the

Institution, which I think is doing a good work. Tomorrow I complete the 92 years of my life. How long it may be continued is only known to Him who knoweth all things.

Respectfully yours,

MOSES PIERCE.

The Board of Government are of the opinion that this money could well be funded for the encouragement of the improvement of textile education by devoting its income to medals to be struck in bronze from the dies of the Cotton Manufacturers' Association medal, but to be entitled the "student's medal", one of which should be given for some grade of excellence to a member of the graduating class each year in such textile schools as may be selected by the Board of Government under such conditions as may be mutually determined by them and the several institutions of learning. Mr. MOSES PIERCE died suddenly Aug. 18, but during his life this plan was submitted to him and received his cordial approval, and it is now reported by the Board of Government with their approval for such action as may be desired by the Association.

By order of the Board of Government,

C. J. H. WOODBURY,

Secretary.

BOSTON, MASS., Sept. 13, 1900.

The SECRETARY. One of those medals has been struck as a sample and is in the hall and is submitted for inspection.

The PRESIDENT. The report of the Board of Government just presented, in regard to the MOSES PIERCE medal is now before you. Any motion on the report is now in order.

On motion of Mr. E. W. THOMAS, seconded by Mr. STEPHEN A. KNIGHT, the action of the Board of Government in relation to the proposed "Student's Medal" was unanimously approved.

The SECRETARY. The President of the United States sends his compliments to this Association and will be happy to receive the members and guests at the White House at 11.30 tomorrow. In order to be admitted it will be necessary that every one shall wear a member's badge or a guest's badge, which will be the identification at the hands of the doorkeepers of the White House. Those members and guests who have not received their badges will please get them of the assistant, who is prepared to give them and record the names of those in attendance. After coming from the reception, the party will go to the north stairway of the War Department Building and be photographed.

The Southern Railway Company offer to this Association an excursion of about 1,800 miles in length, starting on Thursday evening after the last session of the convention. It will be necessary to make arrangements in advance and the itinerary will be taken up in detail at the afternoon session tomorrow. It will be absolutely necessary for the officers of the railway to know who are to go. They desire very much that those engaged in the cotton manufacture shall see the resources of the country through which their lines run.

The invitation from the Southern Railway Company is contained in the following letter:

SOUTHERN RAILWAY COMPANY,
WASHINGTON, D. C., Sept. 21, 1900.

MR. C. J. H. WOODBURY, *Sec'y.*,
New England Cotton Manufacturers' Association, Boston, Mass.

My Dear Sir—Referring to the proposed annual meeting of the New England Cotton Manufacturers' Association which will be held in Washington, D. C., October 16th to 18th inclusive.

It affords us great pleasure to extend to your Association an invitation to visit the Cotton Mill Districts reached by the Southern Railway. We will be glad to extend to your Association, as a body, the courtesies of our line.

We hope this invitation will be accepted, and that early in the meet-

ing a committee will be designated to prepare an itinerary and confer with this office in regard to the movement of the party.

Our Mr. M. A. HAYS will present this letter in person, and we will be very glad to have you advise him as per your action in the matter.

Trusting that your meeting will be beneficial to all concerned, I am,

Yours very truly,

M. V. RICHARDS,

Land and Industrial Agent.

The PRESIDENT. Ladies and gentlemen,— members and guests of the Association,— the New England Cotton Manufacturers' Association has come to be widely known. The interests it represents are national. The 21,000,000 spindles and 450,000 looms, together with its capital of more than $500,000,000 are suggestive of a wealth of industry which is interwoven in the fabric of our useful occupation as one of the most important factors of labor employment. The objective purpose of the Association is the promotion and advancement of the cotton textile interests; its influence is of recognized value in other spheres of useful work. This assemblage constitutes the opening of the sixty-ninth convention of the Association. Its annual meetings are held in Boston, the place of its founding. Its semi-annual meetings convene at various central points throughout the country. This year we meet in the city of Washington, the nation's capital. It is an opportune time because of the deep interest we all have on the important questions which concern, as we believe, the welfare of the nation.

This occasion is one of special interest and more than usual pleasure to you all, because of the fact that we have present with us this evening, gentlemen who have distinguished themselves in their wise management of important departments of the national government. They have come to greet you with their welcome. In the conduct of business, however, much of technical knowledge and skill may be required to insure its success. There always exists the essential and pre-requisite — the capital, and a proper financial management. How essential an element

this is in the affairs of this nation, we can easily comprehend through our own and the experiments of other people. The wise and successful financier of national interests may be well designated a scientist of exceptional achievement. We have with us one who has distinguished himself and because of his great financial achievements has been selected for a most responsible position in the government. I have the honor and pleasure of presenting to you the Hon. LYMAN J. GAGE, Secretary of the Treasury. [Applause.]

Hon. LYMAN J. GAGE. Mr. President, ladies and gentlemen of the New England Cotton Manufacturers' Association, I suppose the ladies are a part of the New England Cotton Manufacturers' Association. In my opinion they are perhaps the most important part. I am sure that, speaking for myself, it gives me a large share of pleasure in seeing so fine a representation of the better half of the members of the New England Cotton Manufacturers' Association here present with you. The Association that you are related to is one of many similar associations representing trades, industries and professions that have come to see in the process of time the great value of friendly association; not with the direct object of profit making or profit sharing as the particular result of their associating together, but rather to study together in a friendly manner the best methods, the best economies and the best ideals that relate to that particular trade, industry or profession. Washington has come to be a sort of Mecca for these various associations. And I am sure none come here, or none have come here bearing a greater importance to the general welfare and happiness and comfort of the people than the association represented here tonight. I am sure that I utter the sentiments of the President of the United States and all the members of his Cabinet, the officers of the District of Columbia, and all the people who here reside, when, in their name, I give you most cordial and hearty welcome to our city.

I think it is a timely opportunity to indulge in a word or two

of congratulation. Your respective interests here represented, like other industries all over the land, have passed out from the dark shadows of a gloomy past into the bright sunlight of a prosperous present. Your factories, I believe, with few exceptions, are all open, manned with industrious operatives. Your trade for the product of your factories is good. Your markets are gradually widening. You are to be congratulated, the country is to be congratulated, on this general revival of industry. You are to be congratulated, the country is to be congratulated, that we have peace at home, that the problems and struggles of the past two years have substantially passed away and that the future gives promise of peace, prosperity and happiness. You are to be congratulated, too, that in the important element which lies at the root of all your trade and contracts and activities, namely, the standard of money, the intermediary thing into which your fabrics must first be converted to be reconverted into raw material and into labor — that that standard is fixed and established probably on enduring foundations. [Applause.] You can now make contracts with people at home and abroad, both parties to the contract knowing what the terms of money mean in which that contract must at last be settled.

I cannot occupy your time. I only step forward to give a word of welcome and to express the appreciation that our people here have and that the government has in having you make this the scene of your meeting. Let me wish for you, one and all, the highest happiness and the greatest prosperity in the future. [Applause.]

The PRESIDENT. In the extension of this very pleasant and entertaining welcome to you, we have another with us, a native of Massachusetts, whose people have honored him upon every occasion within their power. He has rendered important national service. He is widely known to the business interests of New England and especially within the birthplace of this Association, because of his prompt and cheerful recognition of important business questions and the readiness with which he

has always tendered a helping hand. I have, therefore, great pleasure in presenting to you the Hon. JOHN D. LONG, Secretary of the Navy. [Applause.]

Hon. JOHN D. LONG. You cannot always tell how a man is aiming until the gun actually goes off. I certainly thought that the presiding officer, Mr. THOMPSON, was going to call upon my friend, Col. WRIGHT, when he spoke of the New England man who is identified with our business interests. He seems to have entirely forgotten that I regard myself as an old salt, suggestive of "a wet sheet and a flowing sea."

My friend, Mr. GAGE, has begun, as everybody ought to begin, by referring to the ladies who are here. Knowing that he is familiar with Scripture, I thought he was going to refer to that passage which says, "They toil not, neither do they spin, yet Solomon in all his glory was not arrayed like unto one of these." [Applause.] The spinning has passed into other hands.

I have always been interested in the cotton manufacturers of New England. I cannot say that I was brought up in a cotton mill, but a large part of my early education was on the outside of one. I know something of the development of the cotton manufacturing interest in New England. I remember it in its earlier days, and I can compare those days of small beginnings with the present marvellous development of the cotton manufacturing interest.

I don't know that the navy is in good favor with you, because of late years we have dispensed with the sail which used to be wrought out of canvas and manufactured in the duck manufacturing establishments of Lawrence and other places in New England. If the coal strike goes on much longer it is possible —I don't want to hold out too great encouragement to you,— but it is possible that the supply of coal may run so short or the prices become so high that we shall be obliged to resort again to you to manufacture us the old fashioned sails. If we do,

judging from the success of the political campaign, I think we shall not want wind with which to fill them. [Applause.]

I join in the hearty welcome which Mr. GAGE has extended to you in behalf of the administration, so far as we are permitted to represent it, to this great capital city of Washington. It is possible that you have selected it because it would be interesting to you to come where the chief magistrate of the country lives and where, under a popular fallacy, the governing forces of the country are supposed to reside. It is a fallacy when we talk of government carried on by a president and cabinet and legislature, as if they were the men that made the laws and fashioned our economic system. I love to think that the real governing body of this people is the people themselves, as represented by you gentlemen here. You represent one of the great governing forces of our country, and not you alone, but you and the great body of capital and of labor, too, which are associated with you. You represent here, I understand, not only $500,000,000 of money in capital, but you represent an infinite amount of labor, of artisans' skill, of men who work with their hands and who make the great body politic which determine our economics, which determine what laws shall be fashioned for the interests of the people. You represent not only your own accumulations but the accumulations which, through your hands, when paid out by you, pass into the hands of the great body of labor which you employ, and from them into the community which furnishes them their supplies. This vast amount of money which you represent, not only in your investments, but in what you pay for labor, finds its investment again in the bonds and securities which our country advances and for the stability of which the laws of the country are responsible. So this gathering of representative, intelligent, progressive men is representative of something more than their own art and their own line of business. It is representative of the best progress of our people. It represents capital, it represents labor, it represents invention, it represents skill, it represents thrift, it represents saving, it represents the securities of our country. So

the conviction comes that our country stands upon a rock — upon the rock of industry, thrift, skill, honesty, fidelity, citizenship. Therefore I join in the welcome to you, not merely on your own account, but as representative men, representing the great governing forces of our republic. [Applause.]

The PRESIDENT. In the presentation of our distinguished guest who has just welcomed us I may have for a moment forgotten to tell you that he regarded himself as "an old salt, suggestive of a wet sheet and a flowing sea", but you knew it all the while. The people of our country all know him as the Executive Head of one of the most important departments in the service of the nation. The very efficient service which he has rendered has been a most important contribution towards achievements of the American Navy which have startled the world and shown to the nations of the earth that the United States of America has become a world power — one whose influence upon all questions of interest to its people shall henceforth be accorded the most distinguished consideration. [Applause.]

In continuation of the welcome that has been extended to you by members of the Cabinet, there is yet another gentleman to hear from — one who is connected with another important branch of service, one whose service to industries, to labor and to capital is coming to be and in fact has long since been recognized as of very great value. Those of us connected with the textile industry and who have occasion to employ large amounts of labor have witnessed, during our experience, varied changes, which have steadily progressed toward the conditions which now exist, and which impress us seriously as one of the most important questions that we have to deal with — the matter of labor. We witness today in the coal fields a strike involving many thousands of operatives, affecting other industries, increasing the cost of products, bringing about great injury to those who are involved, to their families and to many others. This question of labor is sure to become a far more serious matter than anything we have as yet met with, so far as my judgment and experience

with it indicate. It is a very important subject. I therefore have great pleasure in presenting to you this evening a gentleman who will address you upon the subject, "The Factory as an Element in Social Life." I will present to you the Hon. CARROLL D. WRIGHT, Chief of the United States Bureau of Labor Statistics. [Applause.]

Hon. CARROLL D. WRIGHT. Mr. President, ladies and gentlemen, it is a great pleasure to meet you face to face. It has been my lot for nearly thirty years past to bother you a great deal. But I wish to assure you that all the requests that I have had to make officially of the cotton manufacturers of the United States have been met with generosity and the greatest effort to assist the government in securing the facts.

I was asked to speak to you this evening on some phases of the social life of the factory, and chose for the subject that which has been announced by the President.

THE FACTORY AS AN ELEMENT IN SOCIAL LIFE.

HON. CARROLL D. WRIGHT, Washington, D. C.

The question of the factory life in its bearing on the community is the subject on which I am briefly to address you. It is not my province, nor am I expected, to speak of the economic influences resulting from the establishment of the factory system, nor of the factory as applied specifically to the manufacture of textiles. The textile factory, however, is the symbol of the factory system, and whether as such it is an element in social life is a question which it seems to me is well worth earnest and sincere discussion.

A superficial study of the factory in almost any community leads to the conclusion that it has a deteriorating influence upon the operative as well as upon the population surrounding it, but this is only the superficial view. You gentlemen are perfectly familiar with the deeper, underlying ethical aspects of this question. Thirty years ago, before I began the investigation of social and economic conditions, I very naturally adopted the superficial view; but as my investigations proceeded, and as I studied the real relation of the factory to common, every-day life, I was obliged to change my attitude. It is only natural that this superficial view should obtain in the popular mind. Almost every writer, certainly with rare exceptions, adopts the view that the factory has been beneficial in a purely economic sense. Few are ready to adopt the idea that the factory has been of itself and through its own influence an element in civilization or an element in lifting up the social life of any of the people.

The latter view results from a superficial study, as I have said, and also from an inverted vision. The glamour which surrounded the factory in the early days of its establishment in this country has led to very many erroneous conclusions. Some of us remember and all of us have heard of the Lowell factory girls and the intellectual standard which they attained. Then, looking to the present textile factory operative in different parts of the country, the comparison becomes very sharp and the conclusion apparently decisive. In making this comparison, however, the real conditions of the factory in the early days at Lowell, when the factory girls edited their own literary magazine, which achieved high rank everywhere, are not clearly recognized. The then existing prejudice of England against the factory was well known here, and managers who built their factories in this country at that time were obliged, therefore, to offer attractive wages as well as attractive environment, and by such offers they drew into the Eastern factories the daughters of the New England farmers and a high grade of English girls.

In speaking and writing of this period I have often called attention to my own recollections, and such recollections are just those which have led to false conclusions. My first teacher was a weaver in the factories at Lowell, Biddeford and Salem. She was a writer on the *Lowell Offering*, the factory girls' publication, and a contemporary of LUCY LARCOM and the other noble women who worked in the cotton mills of those days.

A change came over the industrial condition, however, and the American and English girls were forced out of the factory through economic influences, but they were not forced downward in the scale of life. They were crowded out, but up into higher callings. They became the wives of foremen and superintendents, teachers in the common schools, clerks in stores and countingrooms, and they lost nothing whatever by their life and services in the factory. The lower grade of operatives that succeeded them brought the sharp comparison which led to the conclusion that the factory is in itself degrading. The women who came in then were very largely Irish girls, fresh and raw

immigrants, coming from the ignorant and degraded localities of Ireland. Taking the places of the English and American girls in the Eastern factories, they soon began to improve their condition, and the result was that they in turn were crowded out by another nationality. But the Irish girl did not retrograde; she progressed, as had her predecessor, and enlisted in higher occupations. The daughters of the original Irish factory operatives and scrub-women who came to this country were no longer factory operatives and scrub-women. They were to be found standing behind the counters of our great retail shops, well-dressed, educated in our common schools, bright, active, and industrious and with a moral character equal to that of their predecessors.

The war period created the necessity of an increased number of factory operatives, and brought into our mills a great body of French-Canadian women. The opposition in the New England States to the presence of the French-Canadians was as great as it ever had been against the coming of the Irish. The opposition to the Irish had ceased; it was transferred to the French-Canadians, but I venture to say—and in your presence, gentlemen, who know more of this subject than I—that there never has been a nationality coming into the United States that has shown such great progress in the same period of time as have the French-Canadians. They are now graduating from the factory, the Swedes, the Greeks, and others coming in, and the factory is performing the same civilizing operation for the new quotas that it has always performed for the others. It is reaching down and down to the lower strata of society and lifting them up to a higher standard of living.

Now we are in the presence of another experiment, or experience, rather, which teaches the soundness of the view I am trying to impress upon you, and that experience is in the South. When the American girls left the factories of New England, foreigners took their places. The establishment of the textile factory in the South led to the employment of a body of native people, those born and bred in the South, popularly known as

the poor whites, who up to the time of the erection of cotton factories had lived a precarious existence and always in antagonism to the colored people, looking upon work as rather degrading than otherwise, because of the peculiar institution of the South, and on the whole not constituting a very desirable element in Southern population. Today these people are furnishing the textile factories of the Southern States with a class of operatives not surpassed in any part of the country. This is the testimony of the late Mr. DINGLEY in a speech in the House of Representatives. It is the testimony of English manufacturers who have carefully studied the conditions in the South, and the testimony from all sources is to the effect that the poor whites of the South are entering the cotton mills as an opportunity which had never before been open to them. They are becoming industrious and saving in their habits, and, coming to the factory towns, they bring their families, and they are in turn brought into an environment entirely different from that under which they were reared. They are now able to educate their children, to bring them up in a way which was never possible to them before, and thus the poor whites of the South are gradaully and with more or less rapidity becoming not only a desirable but a valuable element in Southern population, on which the integrity and prosperity of a great industry largely depend.

The experience in the South is simply that of other localities, whether in this country or in England. The factory means education, enlightenment, and an intellectual development utterly impossible without it—I mean to a class of people who could not reach these things in any other way. It is an element in social life. By its educational influences it is constantly lifting the people from a lower to a higher grade.

When the textile factory was originally established in England it took into its employment the children of agricultural districts —paupers, charity boys and girls. Much was said about the degradation of the factory children. Parliamentary investigations and reports bewailed the conditions found, but it was for-

gotten in every instance that the factory really lifted these children out of a condition far worse than that in which parliamentary committees found them when employed in the factories. We have had no such conditions to contend with in this country, but we have this superficial idea with which to contend. The notion that the factory creates ignorance, vice, and low tendencies is absolutely untrue. It does bring together a large body of comparatively ignorant persons; it congregates these persons into one community, and hence the results of ignorance and of lower standards of life become clearly apparent because of the concentration. Before the concentration the ignorance existed precisely the same, but was diffused and hence not apparent.

There is a class of writers who are very fond of drawing comparisons between conditions under the factory system and those which existed prior to its establishment. They refer to the halcyon days of England, and call attention to the English operative working under hand methods as a happy, contented, well-fed, moral person. History teaches just the reverse. Prior to the establishment of the factory the working classes of England lived in hovels and mud-huts that would not be tolerated even in the worst coal mining districts in this country or in England today. The factory graduated all those people from the mud-hut. But what was the old system? Degrading, crime-breeding and productive of intemperance in the worst form as compared with the factory of today.

We hear a great deal about the sweating system, and the popular idea is that the sweating system is the product of modern industrial conditions. The fact is that it is a remnant of the old industrial system. It is the old hand system prior to the establishment of the factory, and has been projected into our time. Once universal, the sweating system is now limited to one or two industries, and is gradually being eliminated through the very system which is sometimes condemned. Just as fast as the sweat-shops are developed into the factory and brought under the laws which relate to factory regulation, just so rapidly is the

sweating system being eliminated. The only cure is to make of the sweat-shop the factory. The social life of sweaters can be improved only by lifting them to the grade of factory operatives.

We sometimes hear of the immorality of factory operatives. I have no doubt that immorality exists among factory operatives, the same as it exists in Fifth Avenue and everywhere else on earth where men and women are found, but I do not believe that it exists in any greater proportion in the factory than in any other walk of life. On the other hand, I believe that immoral lives are less frequent among the factory population than among any other class in the community, and investigations, and extensive ones at that, in this country and abroad teach the truth of this assertion.

Some years ago it was my good fortune to look over some of the great thread works in Paisley, Scotland, and this very question of immorality was discussed with the foreman of one of the works. One gentleman, who had been connected with the COATES factories for 40 years, informed me that during that period he had known of but one girl who had departed from a strictly honest life, and she, as soon as her habits were known, was ostracized by the coldness of her associates. This I have found to be true in almost every factory I have ever visited. As soon as a girl loses her character her mates frown upon her and she is fairly driven from the field. Women in cotton mills and in all other factories are as careful of their characters as is any other class. The charge that the factory breeds immorality among women is not true, and cannot be sustained by any facts that have ever been collected. This one condition constitutes the factory an important element in social life, for the women who are there and are working for low wages — lower than any of us would like to have paid, but which are governed according to economic conditions and law — are working honestly and faithfully and living honest and virtuous lives. It must be so. Women cannot work eight or ten or twelve or more hours in a cotton factory and live a dissolute life the rest of the day.

There is another supposition relative to the factory to which

I wish to call attention, and which relates emphatically to the topic of this paper. It is that the factory has a dwarfing influence upon skill; that skill is degraded to common labor. This supposition also arises from a superficial examination of modern establishments wherein a cheap and often an ignorant body of laborers is employed, the appearance being that skilled and intelligent workmen are replaced by unskilled and unintelligent workmen, the conclusion being that the modern system forces the skilled and intelligent workman downward in the scale of civilization. This is not the true sociological conclusion, which is that the modern system of industry gives the skilled and intelligent workman an opportunity to rise in the scale of employment, in intellectual development, in educational acquirements, in the grade of services rendered, and hence in his social standing in his community, while at the same time it enables what was an unskilled and unintelligent body of workers to be employed in such ways, under such conditions, and surrounded by such stimulating influences that they in turn become intelligent and skilled, and crowd upward into the positions formerly occupied by their predecessors, thus enabling them to secure the social standards which they desire. This conclusion, it seems to me, is the true one, and makes the discussion of the question whether the modern system of industry, the factory, really has a stimulating effect upon the intellectual growth of the people not only an interesting but a peculiarly appropriate one at this time.

The whole matter of the consideration of the working man today, then, becomes intellectual. He is carried onward and upward by the power of mental activity which comes from the factory, and cannot be treated separately as one of a class, as he could in the olden time, because in the olden time he was neither a social nor a political factor. Changed conditions in all directions have brought mankind to a new epoch, the distinguishing feature of which is the factory itself, or machinery, which makes it. This we see is true when we comprehend that machinery is constantly lifting men out of low into high grades of employment, constantly surrounding them with an intellectual atmos-

phere, rather than keeping them degraded in the sweat-shop atmosphere of the olden time.

Of course we all know that the condition of the worker is not the ideal one; we all know that every employer who has the welfare of his race at heart, and who is guided by ethical as well as economic motives, would be glad to see his work-people receiving higher pay and living in better houses, living in an environment which should increase rather than diminish their social force. At the same time, we all recognize that the sanitary and hygienic condition of the factory is vastly superior to the sanitary and hygienic condition of the homes of the operatives in many cases. When the factory operative in his home reaches the same high grade that has been reached in the factory itself his social force and life will be increased and his standard raised to a much higher plane. All these things are matters of development, but when we understand that manufacturers in this country are obliged constantly to deal with a heterogeneous mass, so far as nationality is concerned, while those in other countries deal with a homogeneous mass of operatives, the wonder is that here we have kept the standard so high as it has been. In considering all these aspects, as briefly as they have been touched upon, we cannot but feel, as I have indicated, that the factory reaches down and lifts up; that it does not reach up and draw down those who have been raised to a higher standard. This is the real ethical mission of the factory everywhere.

You gentlemen are the managers of great missionary establishments. In your conduct of them as industrial institutions you must recognize economic laws and conditions. It would be suicidal to take the purely ethical view at the expense of the economic, but while recognizing the economic conditions which compel certain actions, I believe there is no great difficulty in recognizing also the ethical relations which ought to exist between employer and employee. These ethical relations are becoming more and more a force in the conduct of industry. Whether the new developments of concentrated industrial interests

will lead to a still higher recognition of the ethical forces at work is a question which cannot at present be answered. My own belief is that the future developments of industry will be on this line, and that the relation of the employer and his employees will rest upon a sounder basis than heretofore.

The social condition of the working man and his education, which we have insisted upon, have led him into the strike method as a means of asserting what he calls his rights. He has in this adopted the worst examples set him by his employers in the past. Greater intelligence, a broader recognition of the necessity of higher social standards, will lead to a recognition of other principles that will enable him to avoid industrial war and his employer to recognize the intelligence which is willing to avoid it.

PRESIDENT'S ADDRESS.

D. M. THOMPSON, Providence, R. I.

Gentlemen:—

I congratulate you upon this pleasant occasion and trust that the 69th meeting of your Association may prove an auspicious event. The action of your Board of Government in the selection of this beautiful city, seems fully confirmed in the pleasing expressions of your approval and the happy faces of the many guests and friends who honor us by their presence upon this occasion.

We shall ever cherish with grateful recollection the cheerful and hearty welcome which we have received at the hands of the honorable gentlemen, the distinguished members of the President's cabinet. Their salutations and cheering words of encouragement are typical, and suggestive of that broad, liberal spirit which has distinguished their labors and counsels during a period of grave and momentous events such as find few parallels in history. A confirmation of this judgment, I believe, is near at hand in the re-election of their chief, our beloved and honored President, WILLIAM MCKINLEY, whose skillful leadership, nobility of character and sterling integrity have won the hearts and confidence of the American people.

The primary object of this convention is the promotion and advancement of the cotton textile interests of America. We have assembled for the purpose of conference upon any and all questions which may be deemed of value to the interests represented by this Association. The record of the transactions of the past attest the merit of your purpose. The papers which are

here presented upon the almost innumerable topics pertaining to the principles and technics of your art are of great value in the determination of methods and systems, and give promise for that future progress which we earnestly desire. It is important that members shall participate as freely as possible in the discussion of these papers and the topical questions, to the end that there shall result the most liberal diffusion of knowledge, attainable only through the interchange of individual experience. The papers and other specific and general business requiring your consideration will be presented by the Secretary in accordance with the directions of the Board of Government.

In the interest of brevity I will pass to other more general questions, which, though unusual, I trust may not prove wholly irrelevant.

When I contemplate the vast amount of capital invested in the cotton textile industries of the United States and am conscious that the time is now at hand when its products demand a larger market, I am impressed that there are duties which devolve upon the members of this Association at this particular time which are not as yet prescribed in your by-laws. Definite as the purpose of the meetings of our Association may appear, we recognize the general unwritten law of self-protection as alike applicable to the promotion and conduct of our private or collective business interests.

DUTY OF THE HOUR.

During the period since the location for this meeting has been determined, I have been impressed with the feeling, which has steadily strengthened, that the selection of the City of Washington at this particular time and on the eve of a national election, when questions are at issue which involve not alone the vital interests represented by the members of this Association, but the interests of all the labor and the capital representing the incomparable resources, the trade, manufactures, commerce and the marvelous enterprise of the people of the United States of America, indicates conditions wherein Providential inspiration is

entitled to the honors, rather than the human wisdom of the Board of Government.

I regard this selection, therefore, as peculiarly fitting. We are assembled within the walls of this beautiful city, beneath the shadows of the great dome of the nation's capital, representative of the greatest resources and national power of any nation upon the earth—a veritable modern Athens; within its archives are the records of the world's marvelous progress in discoveries, inventions, science, the domestic and fine arts. The central figure is American liberty,—its free institutions and historical events, typical of the wonderful genius and versatility of the American people and their unparalleled achievement in the world's present civilization.

The New England Cotton Manufacturers' Association is not a political organization, nor is this meeting intended as a political assemblage; but, in view of the conditions, occasion and the great interest we have at stake, I respectfully declare my conviction that this presentation is in accord with my judgment as to duty, and I believe is distinctly representative of the views and experiences of all Americans who have given careful intelligent study to economic questions as related to pure American interests. Of what value to the mariner and passengers is that once noble ship, whose loss or wreckage compelled the unfortunates to seek shelter and temporary safety in the life boats. To be wise after the fact is of no material effect; wise forethought and that proper apprehension of danger which insures the necessary safeguards, are the indispensible elements of insurance against misfortune.

THE NATIONAL HONOR.

Questions of vital import to the national honor, to the integrity of our free institutions, to the security of capital and vested interests, to the safety of the millions upon millions of dollars in our savings institutions, the product of the toil and savings of labor, to the safeguards of our present conditions of unparalleled prosperity, to the continued employment of all the labor of the

country, to the safeguards and promotion of family relations, to the welfare of children within homes where education, the necessities, pleasures and comforts of life are now available, are within a few days to be submitted to the suffrages of the American people—a tribunal from which there is no appeal. Upon that verdict hangs all our hopes for the future. A mistake, however much it may be deplored, cannot be recalled. Recent experience during a former administration of different public policy was attended by the horrors of financial ruin, the wreck of fortunes, the unemployed labor, the reduction of wages, the tax upon charity, the untold sufferings of the wives and children of the unemployed, the exhaustion of capital and the losses of more than $10,000,000,000 through suspended production are memories of a past which should suffice for more than one generation.

THE RIGHT OF INDIVIDUAL OPINION.

I have every reasonable and proper respect for the opinions of those who may be in opposition upon questions political or otherwise, provided that such opposition is restricted within the limits which safeguard national honor and the integrity of our free institutions. I am well aware that men of honorable life and unsullied reputations are to be found within the ranks of nearly all political parties. I will concede the right of individuals or partisan organizations to the fullest freedom of independent thought or action in the promotion and advancement of their personal or collective interests, subject to the restriction of a true patriotism and a respect for the rights of every citizen to determine his own selection of duty, under the laws which have been enacted for the benefit of the common weal.

I have respect for the silver mine owner in his desire to advance the value of his product, or for the importer of the products of foreign labor in his desire for a reduction of tariffs, which enable him the acquisition of larger profits, but I withdraw that respect when in the accomplishment of their desire, resort is had to gross misrepresentations. This accusation can apply

to those only who are conscious of their course of deception. The victims are not wholly confined to the laboring classes or to those who are presumably uninformed, for there are many among those accredited with education and even exceptional intelligence who from the nature of their vocations and circumstances have given but little study to the questions involved in this paramount issue — propositions which affect not only the business interest, but the very life blood of every American citizen.

VITAL CONDITIONS.

I can conceive the full measure of advantage to the silver mine owner in his proposition of a parity of silver to gold in the ratio of 16 to 1, but I cannot comprehend the action of the millions of those who in the support of this policy yield their consent to the acceptance of a depreciated currency in payment of their services at the rate of forty cents upon the dollar. Success, if it were possible upon this line, must inevitably result in the degradation of labor, a paralysis of business, a financial disaster unparalleled in the history of our country, the full recovery from which would not obtain during the activities of the present generation. The financial question involves the national honor and, independent of other vital interests, is a sufficient justification for the continuance in power of the present administrators, whose experience and knowledge of the important questions will prove of incomparable value to the country.

I believe that a very large majority of the American people are in full accord with these principles. They have the highest respect and confidence in the present administration of our government and desire its continuance, but there is ever present an element of danger, due to over-confidence, the natural sequence of which is a failure to perform the full duties of citizenship. It should be the bounden duty of every individual and all business organizations to act promptly in the rendering of every service within the power of their influence, to the end that such inevitable disaster and misfortunes may not only be averted in

the present, but that its defeat shall be attended by such overwhelming majority that its pernicious and poisonous influence may be entirely eliminated and removed from American politics.

The achievement of this end is worth immeasurably more than its probable cost. The defeat of this opposition and modern democracy, if attended by reduced Republican majorities in the electoral vote, as compared with 1896, while it will afford present safety, is sure to give encouragement to the opposition for continued agitation and a consequent disturbance of commercial interests. The accomplishment of their permanent defeat, justifies all reasonable demands and requisitions of the national committee, who should request of all organizations representative of American industry, a prompt declaration of their several interests in relation to this vital question, and the most liberal devotion of their influence in the attainment of this object of incomparable value to the future progress of our American civilization.

IMPERIALISM.

There are other questions presented by our opponents upon which they base their demand for the people's support. Second only to silver is the charge of Imperialism, which seems to them as possessing the charm of a bewildering dream. Its hypnotic influence is deemed by them a factor sufficient to compel allegiance to fantastic dogmas. Can you imagine a more vain and foolish illusion? It suggests the legend, "Whom the gods would destroy they first make mad."

This modern democracy composed of populism, anti-imperialism and socialism is a wonderful production. It is a political phenomenon such as not hitherto known in American political organization. The original party which we have known in former times, whose policies, while we have combatted them as fraught with great injury and disaster to the progress of our industrial development, were yet such as compelled our respect for the sincerity of its leadership,—is but a remembrance of the past. It is, however, a great misfortune that its political robes are avail-

able for the shielding of forces which, however honest and sincere their purpose, must, if successful, result in the overthrow of national honor and the rending asunder of the ties of our American institutions. Their appeal to popular favor by continued misrepresentation and persistent reference to the policy of the fathers in their founding of our government and its institutions, is to be regretted and demands the employment of every honorable means necessary to a proper disclosure of their revolutionary purpose.

UNFORTUNATE ERROR.

It is a recognized misfortune that a few Americans, who have in the past enjoyed the confidence of our people, should have lapsed into the grievous error and delusion of so-called anti-imperialism. I do not doubt their sincerity, but I believe they have committed the greatest error of their lives. Their influence, however, has been a potent factor of disaster and misfortune. Their association with and promulgation of this doctrine gives to it, in the estimation of many, a serious aspect. The tri-party organization and its leadership have availed of this condition and thrust it before the people as a vital issue, appealing for their support, on the ground of its opposition to the cardinal principles of our government as declared by the forefathers and founders of our liberty.

The misfortune of this proposition lies in its possibility of misconstruction and consequent deception. Its advocacy will have cost the lives of thousands of American soldiers and the needless expenditure of more than a hundred millions of dollars before the questions due to this agitation shall be settled. Its promoters are, many of them, sincere and conscientious in their views, but the time is sure to arrive when they will of necessity realize their error and grave responsibility.

CHEERFUL PROSPECTS.

The American people are a unit in the respect and honors accorded to the memory of the patriots of the Revolution. They

have a profound respect for their intelligence and acknowledge the wisdom which they exhibited during the crucial period in the world's history, yet they reverently give all due credit to the God of our fathers whose influence they fain would believe directed their great achievement.

These conditions are applicable to all nations, and to all people and periods of time. The responsibilities of the present are not less than in former times, and the same God of our fathers is equally manifest in his influence upon the destiny of this American people. The evidence of this is to be found in the record of the Hispano-American war. The issues thrust upon this nation through the action of Spain and the treachery of its subjects, were finally accepted as a just cause for a declaration of war by the Congress of the United States. The conduct and management by the President and his advisers, and the marvelous achievements of the army and navy are the records of events which find no parallel, — an epoch in American history long to be remembered. Its influence will reach far into the future, as a guide and beacon light to the generations who follow. The results embody conditions which are now crystallized into the very fibre and life of this nation. The American flag now floats over territory which is American. Its acquisition was a legitimate result of the war and could not, without sacrifice of national honor, be averted. No human power can ever disturb or sacrifice a single thread in this fabric of national integrity.

The results of the war in the liberation of Cuba have established before the world the very highest ideal of honorable and unselfish dealing on the part of the United States. This, coupled with the acquisition of Porto Rico and the Philippine Islands, bears the impress of the influence, inspiration and direction of a Divine Providence — a condition which all Americans will do well to respect and accept.

The time is near at hand when the strife and conflict of present political issues will be removed. This question will be settled, and the results are sure to be recognized as of incom-

parably greater value than is now possible to appreciate. The Philippine possessions are destined to become an important factor to the commercial interests of the United States, apart from the great natural resources they contain. This acquisition establishes a portal or entree into the trade of the Orient. Eight hundred millions of people are rapidly coming within the influence of western civilization. Its trade, even now of great interest, is destined to rapidly extend and will become of almost incomparable value.

American interests demand the most careful attention in their relation to this market. The rapidly increasing product of American labor must look for relief. It is the duty of the government of the United States to safeguard this interest with the most zealous care.

We have a population of nearly eighty millions of people. Young men who cast their first ballot in this national election are destined to witness during their lives a population of probably two hundred and twenty millions in the middle of the twentieth century. Can you conceive it as possible that Americans will be content to longer remain inactive, and take no share or part in the world's progress? Such propositions, or the charges of imperialism and its attendant insinuations, if honest, are but the delusions of a foolish dream. Its effects will pass away with the defeat of its promoters, and, buried in the oblivion of the past, will soon be forgotten as other errors which have gone before.

REPUBLICAN POLICY.

Republicanism, absolute freedom and equal rights to all men, the conservation of national honor, the protection of American labor and the products of domestic industry, are synonymous terms. The founding and subsequent growth of the important textile industries represented by this Association, as also of the iron, steel, coal, and the infinite variety in miscellaneous vocations and departments in useful work, wherein the millions of of our people are employed, while they are the product of

American genius, their achievement has been attained through the agency of a protective tariff.

Coincident with this marvelous growth and development of the mechanic and useful arts, we witness the equally marvelous production of our agricultural pursuits, and nearly one-half of the world's railroad mileage engaged in the distribution of American industrial products. The evidence of American civilization and its incomparable superiority over all other nations and peoples upon the earth, as manifest in the comforts, pleasures, and even luxuries possible to every American of frugal habits, is sufficient to arrest attention, and compels the admiration of all nations and peoples who have witnessed its operations. Can any honest American citizen of ordinary intelligence question the truth of this proposition, or that we are today in the actual possession of the material conditions of an unparalleled period of prosperity? Its operations, however, are momentarily checked and held in abeyance through the fear of a possible disaster.

APPEALS TO REASON.

American citizens of all classes and representatives of all vocations, I implore you to pause for a brief moment and give heed to the conditions which have affected *you* in your own business occupations! What have you observed in the experience of others? How much of sorrow and misfortune can you recall during the period from 1893–1897? Are not the remembrance and records of that time an unpleasant recollection? Are you willing to risk a change of national administration and part with the possessions you now enjoy? It seems as if there could be but one answer to queries such as these.

The questions of vital interest at the present time are: Will the spirit of American enterprise and its productive labor permit a disturbance of existing conditions and present policy in the acquisition of foreign markets, wherever they may be found, or allow the doors to the trade of China to be closed against them? If these questions could be quietly presented to every

American citizen, the appeal to reason and to common sense would not be in vain, for there are none who will knowingly exchange pleasure for sorrow, profitable employment for idleness, or prosperity for adversity. All may rest assured that the very life of our people, their comfort, pleasure, and continuing progress toward higher planes and better spheres of activity —conditions applicable to all whether rich or poor—are possible only through the support and maintenance of present national conditions. Considerations of national honor, the perpetuity of our free institutions, the security of vested interests, the investment of capital necessary to the continued development of our natural resources; the earnings of American labor and its savings, together with the peace of mind, the contentment of all our people, and the continuance of the present condition of unparalleled prosperity, are sufficient to justify the earnest personal interest and influence of every individual and business organization in the United States of America, who desires a realization of that quiet, restful enjoyment of the proverbial "peace on earth good will toward men."

The PRESIDENT. I will request the Secretary to read several letters from distinguished persons who are unable to be present with us on this occasion.

The Secretary read the following letter from Hon. CHARLES EMORY SMITH, Postmaster General:

OFFICE OF THE POSTMASTER GENERAL,
WASHINGTON, October 4, 1900.

MR. C. J. H. WOODBURY, *Secretary*,
Boston, Mass.

My Dear Sir—It would give me great pleasure to meet the representatives and members of your organization from Boston and elsewhere when they come to Washington, but arrangements already made will take me into Kansas at that time, and it will be impossible for me to be present at the meeting of your Association.

With renewed thanks, I am

Very truly yours,

CHARLES EMORY SMITH,
Postmaster General.

The SECRETARY. His predecessor and our fellow-member, Hon. JAMES A. GARY, of Baltimore, wires me:

"Regret my inability to be with you and the Association tonight."

JAMES A. GARY.

Secretary ELIHU ROOT has telephoned me this evening since we have been at the hotel that he regrets very much that the state of his health — he is recovering from a severe illness — will not permit him to come out this evening, and he wished me to extend to you his best wishes. Hon. JAMES WILSON, Secretary of Agriculture, through a misunderstanding and on account of conflicting engagements, is expected to be here tomorrow evening instead of this evening, and you will have an opportunity to hear from him at the opening of the session.

I have a cablegram from Manchester, England:

OCTOBER 16th, 1900.
9.47 A. M.

WOODBURY, Arlington Hotel, Washington, D. C.

Extremely regret unable to attend sixty-ninth meeting. All good wishes.

LAWTON, AMERICAN THREAD COMPANY.

Also one from a member who has been prevented by business from being at this meeting:

PHILADELPHIA, Oct. 11, 1900.

C. J. H. WOODBURY, ESQ., *Sec'y.*,
P. O. Box 3672, Boston, Mass.

Dear Sir—On behalf of the Pennsylvania Museum and School of Industrial Art, I desire to convey to your Association the sincere thanks and appreciation of the Pennsylvania Museum and School of Industrial Art, of which I am a member of the Board of Trustees, for the action which your Association has taken in providing a medal to be awarded to a student of the Philadelphia Textile School, one of the departments of the Pennsylvania Museum and School of Industrial Art, and in this way recognizing their work.

Very respectfully yours,

M. A. FURBUSH.

The SECRETARY. I am instructed to report that it is the opinion of the Board of Government that it is advisable to hold the meeting of a year hence at Buffalo during the Pan-American Exposition. As a preliminary measure a number of rooms have been provisionally engaged for the last Wednesday and Thursday in September. There are a number of circulars of the Pan-American Exposition here for distribution to the members.

The PRESIDENT. I now declare this session adjourned until 2.30 tomorrow afternoon.

On Wednesday, October 17, 1900, at 11.30 A. M., the members and guests called at the Executive Mansion, where President WILLIAM MCKINLEY, assisted by Hon. JOHN D. LONG, Secretary of the Navy, gave a private reception to the party.

SECOND SESSION.

WEDNESDAY, OCTOBER 17, 1900.

Meeting called to order at 2.30 P. M., President THOMPSON in the chair.

The SECRETARY. In regard to the Southern trip. The Southern Railway gives this invitation for about 1,800 miles of transportation. The cost of meals and sleeping car service will be probably about four dollars per day. According to the itinerary, the party is to leave the station at 10.45 Thursday evening.

It will be necessary to register your names in advance in order that arrangements for sleeping cars may be made. On the return the party will arrive in Washington on Wednesday, October 24. That will give you an opportunity to return from Washington any time on the 25th. The route includes Danville, Greensboro, Concord, Charlotte, Gastonia, Gaffney, Spartanburg, Asheville, Knoxville, Chattanooga, Atlanta, and, if occasion calls, stopping at some other places on the route.

The following papers were read:

The Cotton Plant.

WALTER H. EVANS, Ph. D.
U. S. Dept. of Agriculture, Washington, D. C.

American-grown Egyptian Cotton.

LYSTER H. DEWEY,
U. S. Dept. of Agriculture, Washington, D. C.

America's Textile Industry.—A Southern View.
R. H. EDMONDS, Baltimore, Md.

The Possibility of Cotton Manufacturing in the United States and Especially in the South.
R. M. MILLER, JR., Charlotte, N. C.

The PRESIDENT. I am pleased to announce that this evening there will be present with us Hon. JAMES WILSON, Secretary of Agriculture, who was unavoidably absent last evening, and whom you will all be very desirous to meet. I will now announce this session as adjourned until this evening at eight o'clock.

THIRD SESSION.

WEDNESDAY, OCTOBER 17, 1900.

Meeting called to order at 8 P. M., President THOMPSON in the chair.

The PRESIDENT. Gentlemen, you will please come to order. We have with us this evening a member of the President's Cabinet, one associated with very important work in the Department of Agriculture. Many of us, perhaps all, have followed his work with deep interest in its relation to the cotton plant. The investigations that have been in progress for a very considerable time, are being earnestly followed, and give promise of good results. Equally important work is in progress in other departments, particularly the explorations in relation to timber. I, therefore, have great pleasure in presenting to you the Hon. JAMES WILSON, Secretary of Agriculture. [Applause.]

Hon. JAMES WILSON. Mr. President, ladies and gentlemen, I am pleased and honored to meet the representatives of the great cotton manufacturing industry of the United States. I would have been here earlier in your sessions but for the fact that I went out to witness one of the most interesting sights to be found on our Continent — the struggle between two civilizations, two classes; the struggle between those who do not care to have factories in their neighborhood and those who are deter-

mined they will have factories and build them up and work up raw material and add capital and skill and labor to the raw material before it leaves our shores. I was studying a struggle of that nature. It always comes out one way. The old resistant civilization sits back in the breeching, and the new diversified industry pushes and pushes and pushes until it gets its way, and factory after factory goes up.

There is a very close relation between you people who manufacture and we people who produce in the fields. When you are prosperous and orders are plenty and wages are good and you get the American market to yourselves, we farmers have good markets and good prices; and then, to wheel the thing end for end, when we are prospering and getting good prices for our farm products you have a good market for the wares of your factories. It has become pretty well established with us producers from the soil that whether the manufacturer takes care of himself or not, we must vote with him on election day and see that he is prospered, knowing very well that if he does not prosper we cannot. And so there is a very close and intimate relation between the farmer and the factory. I am glad to note that year by year you are manufacturing a larger per cent. of the raw material in your line. I hope the time will come, and I am sure it will come through wise public policies, when you will manufacture all the raw material produced and never let any of it leave our shores until it has been associated with capital and skill and labor and goes with all those associates. We want to sell those things instead of furnishing raw material to other countries.

I could give you an illustration from the farm. You will not expect me to give you one from the factory. We sold last year 16,000,000 bushels of corn and 155,000,000 pounds of oil meal to the Danes,—a very enterprising, excellent people. If I were a Dane, I would buy from the United States just as they do. That enabled them to make $33,000,000 worth of dairy products which they sold in the markets of the world outside of Denmark—an excellent thing for Denmark. But I cannot get

away from the conclusion that it is rather poor business for the lordly, independent, free-born American to be growing cow feed for the Danes or anybody else.

Now that is an illustration. I do not want to see the grains and the by-products of the mills of the United States go to any foreign country until they have become associated with American skill and capital and labor, so that they shall bring us back every penny that anybody can add to their value before they finally reach the consumer. It will take some time, doubtless, for that condition of things to come about, but it will come about. It is coming about; gradually, steadily. You all remember very well when you sold a much greater per cent. of the farm products than you do today, and to come back to your craft, we are sending far too much of our raw cotton to the foreign countries. Nobody can give a good reason why we do not manufacture all of it here, excepting that while the growth is a rapid one, you have not grown sufficiently to do all that work. I hope the time will come when you will do it, when all the cotton grown on this Continent will be manufactured here, and when we shall be sending to other countries for raw material along those lines and bringing it over here, so that we can manufacture for the outside world to even a much greater extent than we are now doing, and thus bring about a wide diversification of industry. Every man that you employ in the mills who does not produce anything in the fields is a friend of mine, because he has to eat; he gets hungry three times a day. We farmers are at work finding him the wherewithal to live. The Department of Agriculture bases itself with the man who works in the field with his coat off. It is not a department of abstract science. While our work in all the 16 divisions of the department is scientific work in the truest and best sense, we do not go in pursuit of a scientific fact for the love of science; we do it for the benefit of the man who has his coat off in the field, struggling with nature. We endeavor to help that man to solve the problems that nature has hidden with her hands. Along all lines of human effort to produce food from the soil, our department,

I want to say in justice to those gentlemen who give it their lives, is the best equipped of its kind upon the face of the earth, and that conclusion I get from foreign scientists who visit us here.

We study cotton among other things. Over three years ago a fungus attacked the cotton plant in the Sea Islands along our Atlantic coast and the cotton growers applied to the pathologist of our department. We have kept a man down there three years studying that fungus. We cannot always determine what will destroy a fungus, but we can ascertain, if a given crop cannot be grown in a particular place, what crop can be grown there; because this fungus attacks not only cotton but watermelons and other things that are profitable for the producer in that region. At the end of three years our people found relief along that line. They did not find something to utterly destroy the fungus, but they found a resistant cotton plant, a plant that could be grown there in defiance of that fungus.

Along other lines we are at work to help the cotton grower. You gentlemen import cotton from Egypt and other foreign countries. We have been at work through our pathological division, to ascertain what can be done along the lines of hybridization to improve the cotton plant and get some of the characteristics of those cottons grown in Egypt and elsewhere added to the characteristics of cotton grown throughout the United States. We have had some success along that line, and I asked the scientist who has been doing that particular work to mount his specimens for me so that I could bring them over and let you see them. He did the work, and it was very interesting to me; and then I said, "I must never attempt to deprive a scientist of the credit of his own work," and so I asked Dr. WEBBER to come over and bring his samples so that you could see them. You will be good judges of the effect of hybridizing cottons. The principles that underlie efforts along these lines are that we get variety by hybridizing. We get more variety by — to use the common term — cross breeding, and then by selection from those varieties we attain excellence. That we are doing and will continue to do. Dr. WEBBER has taken some of the first steps. He has

hybridized cottons; he can show you the male and the female parents and the progeny, and you will be the best judges in the world of the value given to the fibre of either the male or female parent. I want you to see the man who does the work, and he will answer any questions you wish to ask regarding his work along this line. When you come to Washington and call at the Department of Agriculture, we should be prepared to show you some one thing we are doing in which you might be interested, and it occured to me that in addition to what the scientists of the department have called your attention to during the day you might be interested in this work of Dr. WEBBER'S. In a moment I will turn the discussion over to the Doctor who will present these matters in detail. I feel more proud to have you listen to one of my scientists than to talk to you myself. [Applause.]

You perhaps recognize the necessity of having such a man as Dr. WEBBER in the United States of America. If I want another one tomorrow I cannot get him; they are not to be had. Nobody is educating that class of men. We need, for example, soil physicists in the Department of Agriculture. Half of the United States is dry and grows no crops unless you water the soil. They are spoiling the soil out there by the injudicious application of irrigation waters, in some cases loaded with salts and in other cases bringing the salts to the surface; and the Macedonian cry comes up from many of those western states and territories beyond the Missouri asking for a scientist to come out there and help them in regard to the soil. The lower half of the Salt Lake valley, for example, will produce nothing today because it has been destroyed by the injudicious application of water. We advertise throughout the United States for soil physicists, and we cannot get them; they are not to be had. You, gentlemen, represent the finest states in the Union. You are proud, each of you, of your educational institutions, and yet none of them are educating men who know anything about the soil or the plant or the animal. A little is being done is some of the agricultural colleges along those lines. I rose to say that I think the United States of America can afford to have one man who

cries aloud about our education along those lines. Half of the American people produce from the soil, and yet no university or college educates anybody with regard to that soil. We want plant pathologists and physiologists, and we cannot find them, because nobody is being taught those things. We have repeatedly advertised for those men through the Civil Service Commission without getting them. We have to educate them in the Department of Agriculture, taking boys who have tastes along those lines and training them. We do not advertise, and never have, for a man who understands domestic animals from a scientific standpoint, because we know we would not get anybody. And yet the soil, the plant and the animal occupy the time and thought and attention and life of half the American people. Now, I call your attention to this, gentlemen, for a practical end. When you go home inquire what is being done along those lines. You support universities, colleges, high schools, technological institutes and all that. Why not do something for the producer in the United States of America? We had a man who helped study tobaccos. When I came to the Department of Agriculture I had a curiosity to know why that cigar from Havana brings more money than cigars made of tobacco grown in Connecticut, Ohio or Pennsylvania. I sent for the pathologist and said, "I want to know about this. I know now what it is that flavors butter and cheese — that has been discovered; but we do not know anything about what flavors tobacco. We want to find out." The pathologist went to work and made considerable advance along that line. We found a gentleman who knew something about the chemistry of plants, and he did good work for us. He found out the origin of the flavor which was produced in the process of fermenting tobacco. He found that bacteria had nothing to do with it, although they have everything to do with flavoring butter and cheese. Japan came the other day and paid him $7,000 and will take him to Japan. We cannot afford to keep that kind of man. I wish you gentlemen would think of this when you go home. Ask your educators what they are doing in regard to the soil, the plant and the ani-

mal. We want soil physicists, we want plant pathologists and we want gentlemen educated in the sciences relating to domestic animals. There is nothing needed so much. I cannot find such men if I advertise for them; they are not to be had. The chief of the division of pathology, the chief of the division of soils, etc., will pick up a likely boy and with infinite patience set about his education to make him useful. That is all I care to say. [Applause.]

The following paper was read:

The Improvement of Cotton.

H. J. WEBBER, U. S. Dept. of Agriculture.

Discussed by Messrs. THOMAS H. SMITH, WILLIAM G. NICHOLS, BROADUS E. WILLINGHAM, J. R. MONTGOMERY, WALTER E. PARKER and C. M. SEARS.

Mr. FREDERICK A. FLATHER. Mr. President, if it is in order at this time, I would like to present a resolution:

WHEREAS, a Pan-American Exposition is to be held in the City of Buffalo on the Niagara frontier during the summer of 1901, which will be thoroughly International in its character and to be held with a view to promoting increased trade between the different countries of the Western Hemisphere; and

WHEREAS, the events of the past few years have opened the eyes of the American people to the possibilities of trade expansion, and our merchants and manufacturers are paying much more attention than formerly to the foreign department of their business, so that it is a particularly opportune time for holding such an exposition; and

WHEREAS, the members of the New England Cotton Manufacturers' Association are interested in any enterprise which will promote the development and expansion of trade in the manufactured products of the United States; now, therefore, be it

Resolved, that the New England Cotton Manufacturers' Association heartily approves of the Pan-American Exposition to be held in the

City of Buffalo, and proposes to hold its seventy-first meeting in Buffalo during the Exposition.

On motion duly seconded, the resolution read was unanimously adopted.

The following papers were read:

The Use of Stationary "Cells" in Place of Rotating Cylinders in the Drying of Textile Fabrics.
CHARLES H. FISH, Dover, N. H.

Uses of Cotton Waste.
EDWARD W. THOMAS, Lowell, Mass.

Discussion by Mr. D. M. THOMPSON.

Putting Up of Yarns for Use and for Market.
F. H. BISHOP, Boston, Mass.

Yarn Testing and Testing Machines.
GEORGE R. SMITH, Ossett, near Leeds, England.

The PRESIDENT. Gentlemen, before we adjourn I wish to call your attention to the fact that the fourth session, to be held tomorrow afternoon, is quite important. Our evening session will be short. Those who go South will leave the hotel about ten o'clock, and we ought to make a great effort that as many members shall be present tomorrow afternoon as possible. There are two papers on the export trade which are very interesting, and I trust you will all be prompt in attendance at 2.30 tomorrow. I now declare the session adjourned until tomorrow at 2.30 P. M.

FOURTH SESSION.

THURSDAY, OCTOBER 18, 1900.

Meeting called to order at 2.30 P. M., President THOMPSON in the chair.

The PRESIDENT. Gentlemen, you will please come to order. The Secretary has some announcements to make.

The SECRETARY. Mr. President, the party who took the photographs of the members of the Association on the War Department steps is in the ladies' parlor and will take orders for them for one dollar, post paid.

The following papers were read:

Markets for American Goods.
D. A. TOMPKINS, Charlotte, N. C.

Our Cotton Export Trade With China.
DANIEL MOORE BATES, Wilmington, Del.

Friction Clutches.
RICHARD H. HILL, Boston, Mass.

New Methods of Combing Cotton.
H. G. MCKERROW, Boston, Mass.

Improved Methods of Combing Cotton.
E. W. ATKINSON, Boston, Mass.
(Submitted after the meeting.)

The PRESIDENT. I have succeeded in securing for our evening session the presence of Rear Admiral GEORGE W. MELVILLE, Engineer-in-Chief of the United States navy, a man who is so widely known that I think that all our members will be very happy indeed to meet him. I have taken the liberty of so stating to him, and I therefore hope that he will not come here to be disappointed by a small attendance. I wish you to consider yourselves as a committee of the whole and exercise your very best endeavors to the end that we may have a large attendance this evening, not only to welcome the Admiral, but that we may, in a short session, close up our convention work and feel that there is encouragement in store for us in the future. I declare this session now adjourned to eight o'clock this evening.

FIFTH SESSION.

THURSDAY, OCTOBER 18, 1900.

Meeting called to order at 8 P. M., President THOMPSON in the chair.

The PRESIDENT. Please come to order. The first business of the evening is the election of members.

The SECRETARY. The Board of Government present with their approval the following names of candidates for membership:

FOR ACTIVE MEMBERSHIP.

FRANKLIN ALLEN, Supt. Boott Mills, Lowell, Mass.
By Mr. WM. G. NICHOLS.

DICKERSON G. BAKER, Asst. MECH. Eng., American Thread Co., Willimantic, Ct.
By Mr. RICHARD H. HILL.

HENRY D. BOURNE, Treas., Hooksett Mills, Manchester, N. H.
By Mr. JOHN H. WHITTEN.

JOHN W. CHAFEE, Pres. and Treas., The Sibley Mfg. Co. Augusta, Ga.
By MR. M. F. FOSTER.

GEORGE E. FARRELL, Treas. Utica Spinning Co., Utica, N. Y.
By Mr. D. W. GRAY.

JOHN W. FRIES, of F. & H. Fries, Winston-Salem, N. C.
By Mr. JUSTIN A. WARE.

F. C. FLETCHER, Vice-Pres., Lawton Spinning Co., 621 Banigan Bldg., Providence, R. I.
By Mr. WM. WHITTAM, JR.

WALTER L. HOLT, Pres. Holt-Morgan Mills, Fayetteville, N. C.
By Mr. D. M. THOMPSON.

AMOS G. MADDOX, Supt. Linwood Mill, Linwood, Mass.
By Mr. A. E. ADAMS.

SAML. F. PATTERSON, Pres. and Treas., Thistle Mills Co., Ilchester, Md.
By Mr. WM. B. HAWES.

T. H. RENNIE, Supt. Graniteville Mfg. Co., Graniteville, S. C.
By Mr. ARTHUR C. FREEMAN.

EDWIN A. ROBINSON, Asst. Supt., Tremont and Suffolk Mills, Lowell, Mass.
By Mr. EDWARD W. THOMAS.

W. H. ROSE, Treas., Granby Cotton Mills, Columbia, S. C.
By Mr. J. SUMTER MOORE.

EDWARD H. SANBORN, Vice-Pres., Cold Spring Bleaching and Finishing Works, 48-51 The Bourse, Philadelphia, Pa.
By Mr. M. A. FURBUSH.

THEODORE C. SEARCH, Pres. Cold Spring Bleaching and Finishing Works, 32 South Broad St., Philadelphia, Pa.
By Mr. JAMES BUTTERWORTH.

D. G. SUNDERLAND, Treas. The Pelham Mills, Pelham, S. C.
By Mr. F. H. BISHOP.

JAMES O. THOMPSON, JR., Supt. Wamsutta Mills, New Bedford, Mass.
By Mr. HERBERT E. WALMSLEY.

W. O. TODD, Sec. and Treas., Lawton Spinning Co., 621 Banigan Bldg., Providence, R. I.
By Mr. WM. WHITTAM, JR.

PHILIP S. TULEY, Pres. and Treas., Louisville Cotton Mills Co., Louisville, Ky.
By Mr. D. M. THOMPSON.

W. R. B. WHITTIER, Mgr. Whittier Mills, Chattahoochee, Ga.
By Mr. C. E. W. DOW.

NELSON WHITTIER, Treas., Whittier Mills, Lowell. Mass.
By Mr. C. E. W. DOW.

BROADUS E. WILLINGHAM, Sec. and Treas., Willingham Cotton Mills, Macon, Ga.
By Mr. D. M. THOMPSON.

OSCAR W. WOOD, Treas., Germantown Spinning Co., Germantown, Philadelphia, Pa.
By Mr. WILLIAM B. HAWES.

FOR ASSOCIATE MEMBERSHIP.

S. B. ALEXANDER, JR., Pres., S. B. Alexander, Jr., Co., Charlotte, N. C.
By Mr. ARTHUR WHITTAM.

EUGENE C. ANDRES, Cotton Merchant, John Hancock Bldg., Boston, Mass.
By Mr. ARNOLD SCHAER.

W. L. DRAPER, Mgr., Dodge Mfg. Co., Atlanta Branch, 522 Prudential Bldg., Atlanta, Ga.
By Mr. C. E. W. DOW.

ARTHUR F. GRAY, Mill Architect and Engineer, 53 State St., Room 509, Boston, Mass.
By Mr. D. M. THOMPSON.

ALFRED K. HOBBS, Rubber, Leather and Mill Supplies, Manchester, N. H.
By Mr. STEPHEN N. BOURNE.

SAMUEL D. LAWTON, Treas., Fall River Machine Co., Fall River, Mass.
By Mr. HERBERT W. OWEN.

D. E. MCGAW, Mgr., Supply Dept. Southern Belting Co., P. O. Box 63, Atlanta, Ga.
By Mr. C. E. W. DOW.

JOHN R. MITCHELL, Mitchell, Bissell Co., 134 Dexter St., Malden, Mass.
By Mr. FREDERICK A. FLATHER.

E. A. RUSDEN, Treas., Rusden Machine Co., Warren, R. I.
By Mr. ARTHUR C. FREEMAN.

J. A. SHEPHERD, New England Mgr., The Sterling Co., 53 State St., Room 631, Boston, Mass.
By Mr. D. M. THOMPSON.

H. E. STAFFORD, Asst. Mgr., Crompton & Knowles Loom Works, Providence, R. I.
By Mr. GEO. W. STAFFORD.

JOHN SYKES, J. P., Pres., English Card Clothing Co., Acre House, Huddersfield, England.
By Mr. EDWARD W. THOMAS.

JAMES T. THORNTON, Sec. and Treas., A. B. Pitkin Machinery Co., Providence, R. I.
By Mr. ARTHUR M. HAMILTON.

RIENZI W. THURSTON, Machinery Manufacturer, Fall River, Mass.
By Mr. A. B. MOLE.

GEORGE E. TILLINGHAST, Treas., Tillinghast, Stiles Co., Providence, R. I.
By Mr. D. M. THOMPSON.

The President appointed Messrs. WILLIAM F. SHERMAN, GEORGE P. GRANT, JR., and JOSEPH D. AIKEN, a committee to distribute, collect and count ballots, who reported later that they had attended to their duty and that each of the names had received all of the votes cast.

The PRESIDENT. I declare that the gentlemen whose names are upon the ballot have been unanimously elected members of the New England Cotton Manufacturers' Association.

The Secretary read the following telegram:

"CHARLOTTE, N. C., Oct. 18. S. B. ALEXANDER, Jr., Washington: Please extend to New England Cotton Manufacturers privileges of Club during their stay in Charlotte. J. S. COTHRAN."

Some of us visited the Manufacturers' Club of Charlotte in 1897, and their doors will be open for you again.

The following paper was read:

Development of Textile Patterns in Former Centuries.

Prof. PAUL SCHULZE,
Director of the Royal Textile Museum, Crefeld, Germany.

Read by the Secretary in the absence of the author.

The PRESIDENT. Ladies and gentlemen, and members of the Association, we have with us this evening a distinguished gentleman who is connected with one of the important departments of the government. He is the chief of one of its most important

divisions and a recognized power of wide influence within the sphere of this department service. He is widely known in our own country on account of great achievements in his profession and for the valuable service rendered to an important department of science. The diversity of his experience has been remarkable; his reputation is world wide. In all of the wide range of his activities he has rendered to his country and its people most important service. Some of you have probably seen him before and possibly have had the pleasure of listening to him as he has recounted in thrilling language some of his remarkable experiences during a long service in the exploration of the Arctic regions. He was first with the Hall Relief Expedition. His next service was with the Jeannette Expedition, which embraced a period of three and a half years. This was especially memorable on account of the terrible suffering and final disaster in the wreck and loss of the ship. Only thirty-three lives were saved. They were then 500 miles distant from any point of succor; when permanent relief came, only eleven were finally saved. They comprised two officers and nine men, of whom but five are now living. Even after such a terrible experience, he again returned to its dangers and the extraordinary hazard of life in connection with the Greeley Relief Expedition. In the hearts of all Americans he was bidden a most hearty welcome on his return home, where we trust that there is very much pleasure and happiness yet in store for him in the future. During the years in which I have enjoyed the great pleasure of his acquaintance I can testify — in common with all others who know him — that while he is a very busy man of strong individuality and indomitable courage, yet he has a big heart full of sympathy and affection for his friends and of devotion to the interests of his country. I have, therefore, exceeding pleasure in presenting to you upon this occasion Rear Admiral GEORGE W. MELVILLE, Engineer-in-Chief of the United States Navy. [Applause.]

Rear Admiral GEORGE W. MELVILLE. Mr. President and gentlemen of the New England Cotton Manufacturers' Association, it is needless for me to say that I am pleased to see you here in Washington, and that I am delighted to be with you tonight.

It is always pleasant for you, ladies and gentlemen, to visit the Capital; and you are fortunate not only in the time you have selected, but fortunate in being able to enjoy this beautiful spell of weather.

In fact, Washington is the great "show city" of the United States. It being the seat of Government, there is — other than the Government's own business — little business carried on here.

Unlike your busy selves in the manufacturing districts of New England, where all is bustle and drive, it must be an especial pleasure and a rest for you to come to this magnificent city to deliberate over the official affairs of your Association, and to thus enjoy, on a visit, with your friends and ladies, the beauty of the city, its architecture and its picturesque and historic surroundings.

It is quite appropriate that I should be with you here tonight, for, am I not one of you? Am I not associated with you in a co-ordinate branch of manufacture?

As an engineer, in my youth, I was partly "raised" on manufacturing textile machinery; and, as well, your good President, Mr. THOMPSON, is not only a textile manufacturing man, but has spent some of the many valuable years of his life as a "Corliss engine" man.

But I am happy to be here to address you as an engineer; proud of the profession that moves the people of the world. Whether it be the civil engineer, the mechanical engineer, the hydraulic engineer, or the mining engineer — we are these men who are moving the people of the world today, and who are closely allied with you, the manufacturer.

It is the engineer who builds your engines, introduces your water power and your water wheels that make your millions of spindles turn around; who mines your coal. It is the engineer

who designs and builds your mighty transatlantic steamers that carry American products to other shores, as well as your massive battleships, and the fortifications and monster guns that defend and preserve the Nation. All, all is the work of the engineer.

And whether it be the fine New England mechanic — that ingenious individual — who designs and builds the machine that knits a lady's stocking, or the man who designs and perfects our mighty ocean racers, they all belong to the engineering and manufacturing class.

You speak of your society as the "New England Cotton Manufacturers' Association." You are bigger and grander than that. Your Association is a National Association. For, does not the welfare of the Nation more or less depend upon the growth and manufacture of our cotton and cotton goods?

In Ante-Bellum days we used to speak of cotton as "King", or as "King Cotton"; and I assure you that you have lost none of your caste or rank — your royal rights and prerogatives, your sway. And, if you are not the actual King of Manufacturers today, you are at least the "White Robed Princess" of the textile manufacturers. [Applause.]

You may feel that you are hard pressed by "Old King Coal" in his grimy blackness associated with old Vulcan, the ironmaster or blacksmith — if you will; but you are ever in the company of kings, for this is not only the *cotton* age, but the *iron* and *steel* age, and of necessity we must work and labor together. For, while you are spinning, the miner and ironmaster are preparing the ship and machinery to carry your products to the far ends of the earth.

We must not forget that we have the beginning of a vast, magnificent market for the outlet of your goods in the Far Cathay, where the teeming millions of China and Japan are glad to receive and profit by them.

It seems provident, when we are turning out more goods than our home market can consume, that we are opening up a foreign trade beyond the seas that will take all of our surplus material, whether it be cotton goods, flour, beef or pork. Opening up a

foreign trade which will profit another land and this nation.

Every yard of cotton goods should come from our Eastern coast, from your mills if you will; and every pound of food product that is needed in our far away market of the Pacific should come from the Pacific coast — or, at least, west of the Rocky Mountains.

The coast trade of China in the goods just mentioned amounts to more than $200,000,000 per annum. Does any one dare stand here and say that we shall not have a portion of that trade? It is a godsend, my good friends, that we have an interest at Manila, in the Philippines Islands — just a couple of days' steaming from the great English depot, Hong Kong, that nearly monopolizes the whole of this trade.

And I repeat, does any one say we shall be driven out of this position; that we shall sneak out of it, or haul down our colors and run from a national duty?

It is not necessary to await the answer from such a gathering of loyal, patriotic New Englanders, nay Americans, as I have with me tonight.

Years ago, when a comparatively young man, I lay and sweated it out in the bay of Manila. Since then the guns of an American Squadron have forever silenced the wail of the poor native under the lash and chain of a Nation that for three hundred years has been known to the Filipino only as the "accursed oppressor".

These islands, I say, are to be only the storehouses of our greater commerce that is to grow until we not only christianize and civilize, but naturalize the Filipino, and make him an honor to the great and good Nation that has taken him under its wing to perfect his manhood.

One word more. Do not forget the nimble-handed people of the South that are ever cutting, and will still further cut, into your trade.

A few days ago I was at Richmond and gazed upon that magnificent water power, the James River, which has been running to waste for ages; and, as I stood there and looked upon the wrecks of the grand old flouring mills that made flour which was

sent all over the world — in fact at one time said to be the only flour that could stand the heat of crossing the Equator without spoiling — I thought really the flour industry has departed — has deserted the grand old Commonwealth of Virginia, and that the great wheat fields of the mighty west, and the Falls of Saint Anthony, have robbed her of her glory.

But again I thought, New England had better look to her laurels if the cunning hands and deft fingers of the South should establish mills here, so much nearer to the cotton fields, and where there is an unlimited amount of available labor.

This, no doubt, is a matter you have well considered; and whether you let them steal away your trade, or whether you use their water power, and pool your issues, and build your factories on the James, is a momentous question for the future.

I thank you for your attention, and hope you will return to your happy homes all the better for your outing; and that your sessions have been useful, and promise a prosperous and profitable future. [Great applause.]

The PRESIDENT. I feel that it is my duty to say a few words to you in parting. I will occupy but a few moments of your time in remarks which may indicate a few of the thoughts which have occupied my mind during our brief sojourn together. If I may judge from the numerous and oft repeated expressions of pleasure on the part of our members and guests, I must conclude that our convention has been eminently successful. Its business appears to have been satisfactory. The record of the Transactions will comprise material of interest to the Association and I trust will give pleasure to the members who were unable to join us on this pleasant occasion.

COURTESIES TO THIS ASSOCIATION.

Our Association has been received with distinguished courtesy and consideration. The members and guests have been given the most cheerful and hearty welcome by members of the President's Cabinet, as also by other distinguished officers of the

federal government. These cordial greetings, followed by the Reception at the Executive Mansion by His Excellency, the President, constitute honors which we shall always cherish as among the most pleasant experiences and recollections of our lives.

I believe that our visit to this beautiful city will prove of more than ordinary interest. The national capital is a vast storehouse of information. Inspections of its treasures are of much value, and their educational influence extends beyond the gratification of curiosity or general pleasure. You are here inspired with feelings of national pride, a loyalty and devotion to principles of government such as are to be found nowhere else upon the earth. You unconsciously commune with your own heart in a reverie which calls to your mind the historical records of the generations which have preceded you and the achievements in the arts and sciences which have produced the marvellous civilization of the present time.

MOUNT VERNON.

I have been impressed with these feelings today during a visit to Mount Vernon in the company of several of our members. It was my first visit, a pleasure which ought to have been realized many years ago. Inspection of the home of WASHINGTON during his life, the mansion within which he lived and died and the sepulchre wherein rest his remains of earth, call to mind another scene known as the "Heart of France", the tomb of NAPOLEON, with its gorgeous appointments in *des Invalides* at Paris.

The steady and continuous procession of pilgrims in their visits to this quiet and unostentatious resting-place at Mount Vernon is attracted thither by a love and devotion to the memory of the Father of his Country. EDWARD EVERETT says of Mount Vernon, "It has become the shrine of America, the center of the American heart", and further, "No gilded dome swells from the lowly roof to catch the morning or evening beam, but the love and gratitude of a united America settle upon

it in one eternal sunshine. From beneath that humble roof went forth the intrepid, unselfish warrior, the magistrate who knew no glory but his country's good; to that he returned happiest when his work was done."

Washington's life and incomparable service, his sterling integrity and devotion to duty, united with his deep reverence for the almighty and divine Ruler of the universe, constitute a power of influence in our national life of inestimable value to those who have since and now live and to all of the generations in the future.

Can we for a moment believe that there is accident in any of God's works? We are his creatures, endowed with marvellous faculties, the power of reason, and the right of individual selection as to our duty or pleasure, but withal subject to his divine will through processes so mysterious that we are unable to comprehend their operation. This power and influence is manifest in all of the events which have touched the lives of humanity from the beginning until the present moment. If we accept this as true, then we may more easily discover a solution to many important questions which now occupy the serious attention of all our people, in respect to the determination of issues vital to the future welfare of the United States of America.

I wish I were able to portray to you a few of the thoughts which flitted through my mind as seated within the colonnade of the mansion at Mount Vernon and looking out upon that prospect of exceptional beauty,—the waters of the Potomac River in the foreground moving with the same majestic but quiet trend as of old when the Father of his Country gazed upon its placid surface,—a scenery, which, when coupled with its associations may easily inspire serious reflection.

THE INCOMPREHENSIBLE FORCES AND IMMENSITY OF THE UNIVERSE.

Every object which our eyes behold, as also the infinite material and forces of nature, which as yet we but imperfectly comprehend, compels our acknowledgment of a divine power. It is

the same power and influence which directed and determined the judgment and the memorable services of WASHINGTON. Pause for a moment and think of our planet, the Earth, of its vast magnitude and marvelous composition. One-fourth of its spherical area of 200,000,000 square miles comprises all of the continents and islands of the sea upon which now live more than 1,500,000,000 of human beings. This enormous population distributed per unit of area is but one-thirteenth the density of the state of Rhode Island. In the contemplation of these conditions if we fail of appreciating a divine purpose, we have but to raise our eyes and look away from earth into the measureless and unknown space of the universe, where may be found evidence which is infinitely more impressive.

Think of the Sun, the center of our solar system, distant 95,000,000 of miles, with a volume 1,300,000 times larger than our Earth; of Jupiter, distant from the Sun 485,000,000 of miles, with a volume about 125,000 times larger than the Earth; of Mercury, distant 36,000,000 of miles, traveling with an orbital velocity of 100,000 miles per hour and making its revolution of the Sun in 88 days; of Neptune, distant 2,890,000,000 of miles, traveling 12,000 miles per hour and making its circuit around the Sun once in 164 years.

Consider the movement of our Earth, making a revolution upon its own axis once in 24 hours and 21 minutes, with a peripheral velocity of 1462 feet per second and traveling in this vast space with an orbital velocity of 63,000 miles an hour, or 18 miles per second, completing its revolution of the Sun in 365 days, 5 hours, 48 minutes and 52 seconds. During this period its deflections of about 22½ degress north and south of the equator and the changed position in its elliptical course determine the seasons and the length of our days and nights.

None the less wonderful are the movements of the Earth's only satellite, the Moon, 2,160 miles in diameter, distant 237,000 miles and making its circuit around the Earth in 27 days, 7 hours, 43 minutes and 5 seconds, during which time it makes but one revolution upon its own axis. The eight phases thus pre-

sented to our view indicate its marvelous relations and functions as in the control and movement of the tides. In the presence of such evidence of wisdom and divine power we ought easily to recognize and accept its influence as the dominating factor of human activities. Familiar as all may be with such information as this — citations of briefest reference — it is nevertheless material of the most startling and impressive nature within the sphere of human knowledge and experience.

THE ADVANCEMENT OF SCIENCE.

Contemplate for a brief moment the achievements of science, the discoveries in astronomy, the founding of physics or the science of motion, also of chemistry; the discovery of the weight of the atmosphere which envelopes the earth with a pressure of $14\frac{7}{10}$ pounds upon each square inch of its surface, varying but slightly with the differences of altitude, also of its function in the sustenance of life and the destruction which would follow its momentary suspension. It is manifestly a self evident truth that there is a central source of all this vast power and marvellous creation; it dominates all matter, material and every form of life. There are no accidents or mistakes. It is God's power, and He alone is the arbiter of our destinies. Can we then for an instant doubt his wisdom and measureless power or that there is a design and purpose in all of his wonderful works?

Our faith that the birth-rights of men constitute them the equals of each other, independent of race, condition or creed, is a logical sequence of human experience, conditions which have resulted from the process of development through education and the inspiration prompted by the subtle forces of intuition.

This brief suggestion touches in a limited and imperfect manner an infinite sphere wherein are to be found the material and forces which prompt all human activities, and its wonderful achievements. They constitute the very foundations upon which have been erected the marvellous superstructure of our modern civilization. This structure, as yet incomplete, is steadily moving forward toward higher planes. Its extension and elabora-

tion, the result of continued advancements in the arts and sciences, the unbounded genius and enterprise of our people and the constant accretions of wealth representative of the surplus products of labor, is destined to give room within its spacious walls for the admission of all of God's creatures. Even now the procession comprising a thousand million of human beings is moving toward the civilization we at present enjoy. Far more than we may realize are about to enter within the portals of a better life. It is a mutation which involves all of humanity. The people of Western Europe and of America now realize as never before that it is a common cause in which all are predestined to take their just share and part.

COMMERCE AND CIVILIZATION.

However vast the responsibilities, the operation assures a just compensation. It is a question which, while it admits the exercise of philanthropic effort and recognizes the value of charity missions, is nevertheless to be solved and completed through the means of trade relations and commerce. Invention and the machinery for the saving of labor have established conditions which render an outlet for its surplus products a vital necessity. We may differ as to the methods to be employed, but as touching the fact there can be no question of dispute. In 1890 there were more than 825,000,000 of people in Asia and nearly 175,000,000 in Africa. If it is the divine purpose that all shall be advanced into better spheres of life,—a question we cannot doubt,—then we may more clearly comprehend the marvelous work of the nineteenth century in preparation for the growth and further achievements in the future. In view of such conditions, can we for a moment question the duty of Americans, or justify the hope—if such there be—that we shall be permitted to with hold our influence and participation in the world's affairs?

OUR COUNTRY A WORLD POWER.

The United States of America have become a world power. Its people are now recognized as among the most advanced

within the sphere of our western civilization. The vast natural resources at their command, their remarkable genius and enterprise in unparalleled achievement and acquisition of wealth, constitute a power of influence heretofore unknown.

An exercise of this potential force is now directed towards broader spheres of action. A proper support of already established industries demand it. The extension of these interests render such action an imperative necessity.

The possibilities of achievement in the extension of all American interests are measureable and may be determined by the will, pleasure and intelligence of the people. We are upon the threshold and entering into an epoch of marvellous advancement. American influence cannot without great sacrifice be withheld. However sharply present lines may now appear, this coming era gives promise of a spirit of peace rather than of war. The advantage of an educated and intelligent constituency is being exhibited as never before among all nations, and its influence will prove a potent factor in the safeguarding of international relations.

American interests demand of the National Congress a broad and liberal statesmanship. Legislation upon questions of commercial interest, such as the Nicaragua Canal, the encouragement of American shipping through proper subsidies, the authorizing and ratification of reciprocity treaties, the adjustment of tariffs upon the basis of a just and sure protection of all American interests which require it, and such provisions as will afford the most liberal facilities in the securing of important information, as to foreign markets and the trade conditions among all nations and sections of the world.

THE COMMERCIAL MUSEUM.

In this connection, the work undertaken by the Philadelphia Commercial Museum is proving of almost incalculable value. It is an enterprise worthy of the most liberal support of business interests and of generous financial assistance by the national government.

AMERICAN COMMERCIAL OPPORTUNITIES.

The revolution in China, while a present misfortune entailing much loss and sacrifice of life, is nevertheless in the line of a progressive development, the extent of which we may fail to appreciate at the present time. It is the manifest duty of the United States to safeguard these and all American interests by every proper means within its power.

The results of the Hispano-American war are destined in the near future to be unanimously accepted by our people as a national blessing. There is no just fear of Americans becoming imbued with the spirit of war for conquest. Acquisitions of territory such as are brought to us through the dispensation of a divine Providence, we may not with impunity despise or reject. It is, perchance, this influence which inspired the American declaration in respect to Cuba, for the purpose of exhibiting to the world the character and unselfish spirit of our people; otherwise, every consideration of national interest should desire Cuban annexation. If such purpose were involved, the final solution of this question may be looked for in the future as a spontaneous desire of the Cuban people. The possession of the Philippines is sure to prove of inestimable value to American interests. They have come to remain with us. Under existing conditions there is involved a grave responsibility, but no other nation upon the earth is more able to assume it than the United States. These possessions will prove of incomparable value to American interests in the trade relations with the Orient and a blessing to the Philippine people, which in due time will be by them universally acknowledged. The 76,000,000 of American people with their enormous wealth of $90,000,000,000 cannot longer withhold their influence and industrial activities from the arena of the *world's* civilization. It is a business enterprise, one which gives a much needed opportunity for business operations in extended fields, with profit to ourselves and reciprocal advantages to the thousand millions of people who await our coming.

IMPORTANCE OF TECHNICAL EDUCATION.

The achievement of this end is being rapidly accomplished through agencies such as this Association and many others representative of industrial labor and capital. I wish I were able to express to you the earnest feeling of my heart as touching the importance of the service which this Association may render and the possibilities of achievement through a properly organized united effort.

The technics of your art demand even more attention than in former times, because of the sharp competition of trade. Your experience enables you easily to comprehend the axiom, applicable to all business vocations—that, it is a "survival of the fittest". Interests which in former times were local have become national in their operations and influence. As a result of our rapid industrial progress, necessities have arisen which compel the consideration of international relations such as never before. The competitions and rivalries among kindred interests are now incessantly active. Sectional differences due to dissimilar physical conditions, combining therewith other factors of present serious disturbance, are matters which deserve serious consideration to the end that adequate and proper means may be determined for the protection and advancement of all interests along the line of least resistance.

There is a steadily increasing activity, which gives assurance that representative business men now realize as never before the value of a union of their interests, in the sense of a concentration of all available means necessary to the realization of their purpose. Such action is especially imperative if we would establish the supremacy of American interest. Progress in this direction is now manifest, but very much remains to be done. To insure the steady employment of American labor and capital, we must secure the requisite facilities to *sell* and *deliver* our products in all of the markets of the world. The people of all nations are conscious of this condition and are now striving for the advancement of their interests as never before.

In the textile occupations, leading European nations have had the advantage of earlier occupation of the field, and the establishment of industrial schools for the education and training of skilled artisans in the technics of their art. American interests are now receiving the benefits of such means. We have several industrial schools devoted to the textile arts, which are rendering almost invaluable service. These should be given the most liberal support and every possible encouragement. Young men of exceptional talent should be encouraged to enter upon this course of study and means should be devised to render, where circumstances justify, a proper and reasonable assistance. It will surely prove a valuable investment. This policy is applicable to nearly all of the useful occupations in other spheres of industrial art. We must recognize the advantages of specialty work. It is important, however, that this education and training shall be administered with wise discretion, to the end that a considerable number shall receive extended courses, thereby preparing them for wider spheres of duty. The benefits to be derived from a liberal treatment of this question will exceed general expectation, and prove of inestimable value in the further development of American manufacturing interests.

Secretary WILSON of the Department of Agriculture during his address last evening made pointed and effective illustrations of this question in his statement that his department finds great difficulty in securing the service of scientists whose training qualifies them for the important work deemed as of vital interest to the advancement of the agricultural industry of the United States.

This Association has rendered valuable service to our cotton textile interests. It has become a power of recognized influence. The sphere of its usefulness is steadily broadening. Let each member strive to perform his just share and part. Union and concentrated effort will constitute a wealth of knowledge and experience. Means should be devised to utilize these forces. To this end there should be urged the largest possible attendance at our conventions. I trust that the members present will do

all in their power to secure a realization of this desire at our next annual meeting in Boston. Thanking you for your kind consideration, I bid you good-night, God-speed and a safe return to your homes.

We have several matters to be presented, after which we will adjourn. If you will kindly remain, we will finish in a very few minutes.

Mr. JUSTIN A. WARE. The Committee on Resolutions consisting also of Messrs. THOMAS G. COX and WILLIAM G. NICHOLS offer the following:

Resolved, that the New England Cotton Manufacturers' Association extend to the Hon. LYMAN GAGE, Secretary of the Treasury, and to the Hon. JOHN D. LONG, Secretary of the Navy, and to the Hon. JAMES WILSON, Secretary of Agriculture, their sincere thanks for the cordial welcome tendered to the Association in behalf of the President of the United States, and for themselves. Also for their kind, earnest and appreciative words regarding the work and influence of our Association, and for the many suggestions respecting the future record and power of our Association.

Resolved, that the thanks of the Association are due to the Hon. CARROLL D. WRIGHT, Chief of the U. S. Bureau of Labor Statistics, for his thoughtful and interesting paper on "The Factory as an Element in Social Life", and for the valued historical and suggestive information contained therein.

Resolved, that we extend to Rear Admiral GEORGE W. MELVILLE, Engineer-in-Chief of the United States Navy, our sincere appreciation of his cordial, entertaining and instructive address.

Resolved, that we extend the following gentlemen the thanks of the Association for their very interesting presentations of the work of the Department of Agriculture and its results: Dr. WALTER H. EVANS, Mr. LYSTER H. DEWEY, Dr. H. J. WEBBER.

Resolved, that from the interesting presentation of the work of the Department of Agriculture and its results we have received a more intelligent conception of this phase of the department's work and give it our hearty endorsement, and that we urge upon Congress the import-

ance of sufficient provisions for this work and the solution by scientific methods of the problems relating to the development and improvement of the cotton plant.

Resolved, that the thanks of the New England Cotton Manufacturers' Association be tendered to the Southern Railway Company for their generous offer of a special train to convey its members and their guests to the cotton manufacturing districts on the line of their extensive railway system.

Resolved, that the thanks of our Association are hereby tendered to Mr. R. H. EDMONDS of Baltimore, Md., for his highly interesting paper on America's Textile Industry; a Southern View. Also to Mr. GEO. R. SMITH of Ossett, England, for his instructive article on Yarn Testing and Testing Machines; and to Prof. PAUL SCHULZE, Director of the Royal Textile Museum of Crefeld, Germany, for his valuable and elaborate paper on The Development of Textile Patterns in Former Centuries.

On motion, duly seconded, the resolutions as read were unanimously adopted.

The PRESIDENT. This closes the business of the 69th meeting of the Association, and I therefore declare its adjournment *sine die*.

Adjourned,

Attest:

C. J. H. WOODBURY,

Secretary.

THE SOUTHERN TRIP.

PREPARED FROM NOTES FURNISHED BY SEVERAL MEMBERS OF THE PARTY.

On Thursday evening, October 18th, by a special train, complimentarily tendered by the Southern Railway, the party left Washington at 10.45 P. M., and arrived at Danville, Va., at an hour which aided the appetite for the breakfast waiting for them at the hotel. After breakfast the party visited the tobacco warehouses and witnessed the novel spectacle of the auction sale of leaf tobacco to buyers from all over the world, and later some visited large tobacco manufactories where the preliminary operations of its treatment were carried on, while others visited independently the raw stock dyeing plant of the Riverside Cotton Mills.

Under the guidance of Mr. F. X. BURTON, president, and Mr. SILAS I. ROBERTS, superintendent, they visited the different buildings of the Riverside Cotton Mills, which have a total equipment of about 68,000 spindles and 3,000 looms.

After leaving Danville, the party stopped at Reidsville, N. C., and looked through the Edna Cotton Mills at that place, and thence to Greensboro, N. C., for luncheon only, and after that to High Point, N. C., where the business people of the town met them with carriages and took them to the furniture manufactories. The amount of time in visiting these interesting industries trespassed upon the schedule to such an extent that it became neces-

sary to omit the contemplated stops at Salisbury and several other places. At Charlotte, N. C., the party was met by a committee from the Manufacturers' Club, through whose invitation the evening was very pleasantly spent at its hospitable home.

On October 20th, as the guests of the Manufacturers' Club, the party was taken around the city of Charlotte in special electric cars for a morning ride, which enabled them to see this enterprising and beautiful city, leaving in time to take the train at 9.25 A. M. for Spartanburg, S. C., stopping on the way at Lowell, Gastonia and King's Mountain, N. C., and Gaffney, S. C., visiting the Ozark, Modena, Arlington, Avon and Loray Mills at Gastonia, of which the first is a new mill recently put in operation and the Loray an uncompleted mill which will be the largest in the state of North Carolina, the Dilling, Cora and Lula Mills at King's Mountain, N. C., and the Gaffney Mfg. Co. at Gaffney, S. C., which is a large mill and one of the model plants of the country. H. D. WHEAT, president and treasurer of the Gaffney Mfg. Co., entertained the party with luncheon.

The train arrived at Hendersonville, N. C., in time for dinner and the party drove to the Wheeler House, a somewhat famous resort, for that purpose. The train was then taken to Asheville, where the party stopped at the Battery Park Hotel and enjoyed the place and the mountain scenery of the French Broad District during the next day, when a few also visited the Asheville Cotton Mills under the charge of Mr. JOHN GILLIGAN. The ride down the mountains Sunday afternoon was through a district of wonderful scenery. They arrived at Spartanburg at 6.30 P. M., and after tea many of them attended the evening services, and then took the train for Atlanta, Ga., where they arrived at 7.00 A. M. Monday and under the guidance of Mr. O. B. TRUESDELL, representing the Howell Cotton Co., they were taken to the Southern Interstate Fair, where they witnessed the process of putting up cotton by the round lap bale press of the American Cotton Co. Some were entertained by the various business houses of Atlanta, some visited a mill on the outskirts of the city now being built and to be known as the Gate City Cotton Mills, and some were

entertained by H. E. FISHER, vice-president and agent of the Atlanta Cotton Mills. After this the party enjoyed the numerous objects of interest at the fair and also visited the Fulton Bag and Cotton Mills and the Atlanta Mills and the textile department of the Georgia School of Technology.

When the party was assembled at the railroad station at Atlanta in the evening and were about to return to Washington, they presented Mr. M. V. RICHARDS, land and industrial agent of the Southern Railway, who was in charge of the excursion, with a beautiful loving cup appropriately inscribed and also voiced their appreciation of the courtesy of the Southern Railway in giving them an opportunity to make such a trip to a few of the Southern Railway mill districts and also to observe the great resources of the territory through which their railroad passes. The presentation was made on behalf of the party by Mr. D. E. McGAW, of Atlanta, Ga., who said:

"When the small party representing the New England Cotton Manufacturers' Association and their friends met at the Pennsylvania depot at Washington to enjoy a trip extended them by the Southern Railway, there were, doubtless, few who had a personal acquaintance with you, who, as the representative of the Southern Railway, was commissioned to take them over the vast area of track into the southern section of our country. They were not slow in finding out to what manner of man and to whose care the Southern Railway dared to entrust the responsibility of their protection.

You, sir, not only did your duty in this respect, but you also endeared yourself to each and every one of us. Your untiring efforts as shown in our behalf have given us great comfort and enjoyment during the entire trip and we appreciate it to the fullest extent.

It gives me pleasure in presenting to you in behalf of the New England Cotton Manufacturers' Association and their friends this token of their regard and esteem, and it is our earnest hope that you may live long to enjoy its pleasures, and in years to

come, should the recollection recall one loving thought, it will have served its purpose well."

To which Mr. RICHARDS responded as follows:

"My friends, this is certainly a surprise to me. This is a period when it seems that special trains, making frequent stops for the discussion of imperialism, 16 to 1, etc., are popular. However popular they may be, I assure you this special train which, run with frequent stops to talk business and discuss prosperity, has been extremely pleasant and agreeable to me. I have been on many trips of this character, with numerous parties, and I assure you that this has been one of the most satisfactory trips I ever made, and it has been very agreeable.

At one time there was a sinner in whom a great many people of the community were interested. They prayed for his redemption, and he said to them, 'Friends, the more you pray, the more I will not be saved.' They kept on praying for the salvation of the man's soul and finally succeeded in saving him.

So it is, my friends, New England manufacturers, in this case; we will keep on trying and persisting by working to convince you that the *South is the best place* for you to locate your mills, believing that once located with us it means greater prosperity for all.

Sincerely I appreciate this remembrance and thank you."

Some of the party left here and returned home independently after visiting the Spaulding Cotton Mills, Rushton Cotton Mills and others in Griffin, Ga., the Toccoa Cotton Mills and Capps Cotton Mills at Toccoa, Ga. and mills at other places.

The run to Washington was continuous, and that city was reached late Tuesday evening, October 23. The thanks of the party for the pleasant trip were extended to the agent of the Southern Railway, Land and Industrial Department, Mr. M. A. HAYS, and also to the manufacturers throughout the South who so kindly received and entertained them.

TRANSACTIONS.

FIRST SESSION.

TUESDAY EVENING, OCTOBER 16, 1900.

The Association met in the banquet hall of the Arlington Hotel at 8 P. M., President THOMPSON in the chair.

The addresses are recorded in the Proceedings.

SECOND SESSION.

WEDNESDAY AFTERNOON, OCTOBER 17, 1900

The Association met in the banquet room of the Arlington Hotel at 2.30 P. M., President THOMPSON in the chair.

The PRESIDENT. Gentlemen, the first matter for the meeting is a topic which will be of much interest to members of the Association, and I take great pleasure in presenting to you Dr. WALTER H. EVANS, of the United States Department of Agriculture. [Applause.]

THE COTTON PLANT.

WALTER H. EVANS, Ph.D., U. S. Dept. of Agriculture, Washington, D. C.

A plant that contributes so much to our wealth and welfare ought surely to be of interest to all those who are in any way engaged in its commerce and to some of the more striking points of interest your attention is invited for a few moments.

Statistics show that the cotton crop of the United States for 1898 was in excess of 11 million bales valued at 305 million dollars. Add to this the very conservative estimate of 10 million dollars as the value of the seed and we have 315 million dollars as the value of this one crop. In addition to the large agricultural population, the operatives of more than 100,000,000 spindles, of thousands of looms as well as unnumbered thousands of people engaged in the handling and manufacture of cotton are dependent upon the products of the cotton plant.

The cotton plant belongs to the botanical family popularly known as the Mallows, a large group of plants many members of which are of economic importance. It is probable that if a modern Paris should undertake to award a golden apple of merit to that family of plants which contributes most towards supplying the necessities of the human race, he would no doubt find his task more arduous than that of the mythological Paris who sat in judgment of the claims of Venus, Juno, and Minerva. In the event of such a contest the competition would probably soon be narrowed to about four families of plants, namely: the Palmæ, the Leguminosæ, the Gramineæ, and the Malvaceæ. If these should be more closely investigated it would probably be found that, in supplying the urgent material wants of man,

the cereal grasses would take first rank, while in providing the natural products upon which the comfort and prosperity of many nations so largely depend, the Mallow family would certainly take high rank. If the cereal grasses can be said to be the great purveyors of the human race, the Mallow family can justly claim the distinction of clothing the majority of the civilized portion of it, as well as contributing in many other ways to supplying its necessities.

The Mallow family, which abounds in the tropics and temperate zones, embraces about 35 genera and some 700 species. The genera which make up this very natural family are remarkable in their great resemblance in structure. The species are herbaceous, shrubby, or arborescent. The flowers, of which the hollyhock is a familiar example, are regular, usually solitary, but in some cases grow in compound clusters. The fruit of nearly all are dry capsules or a collection of one seeded indehiscent carpels. In addition to their general accordance in structure many of the species possess similar properties. A great many of them abound in mucilage which is of an innocuous nature, and nearly all may be used as demulcents in medicine, as has long been the case with the common mallow and the marsh mallow of Europe. When this mucilage is abundant, the plants are used for foods, as is the case of the fruit of the okra or gumbo *(Hibiscus esculentus)*, and the *H. longiflorus* of India. Other species, while somewhat less nourishing, are extensively used for food in different parts of the world.

Many of the Malvaceæ are remarkable for their bark abounding in bast fibers. These fibers, on account of their tenacity, are used for cordage, paper manufacture, and other purposes. In his extensive work on the Useful Fiber Plants of the World, Mr. CHARLES RICHARDS DODGE has enumerated more than 50 species of malvaceous plants, the fiber of which is known to be of value. According to CAVANILLES, *Malva crispa* is well adapted for cordage. *Sida abutilon* is said to be used for this purpose, and the Deccan or Ambari hemp *(Hibiscus cannabinus)* is an important export of India. ROYLE states in his botany of

the Himalaya Mountains, that quite a number of species are adapted for paper making and that *Sida rhombifolia*, *S. rhomboidea*, *U. sinuata*, *Hibiscus tortuosus*, *H. furcatus*, and *H. collinus* all possess serviceable fibers. According to the same author *Abelmoschus moschatus* has been cultivated for a long time on account of its musk-scented seeds which he says "are used in Arabia to add to coffee, in India as a cordial, and in the Sahrumpore district for clarifying sugar. *Hibiscus sabdariffa* is cultivated for the pleasant acid of its red calyx, while the flowers of *Malva alcea* and *Hibiscus rosa sinensis* are decidedly astringent and are used in China and in India for blackening the eyebrows."

The uses to which the different parts of the cotton plant are put are more numerous than one would ordinarily suppose. The roots are used in medicine, the bark of the root being valued for certain purposes. The stalk, in addition to its fuel value and use as a fertilizer, contains an important bast fiber which may be used for thread, for bagging, as well as for paper manufacturing. The common uses of the lint produced on the seeds are so manifold and well known as to need no mention. The seeds themselves have important uses in addition to that of planting. For years the question of what to do with the surplus seed was an important one and thousands of tons were annually destroyed. Now they are utilized and as a by-product to cotton growing are quite important. According to GRIMSHAW, in the Journal of the Franklin Institute for 1889, a ton of cotton seed yields, in round numbers, 1,090 pounds of meats, 890 pounds of hulls, and 20 pounds of linters. These linters, which are the very fine fuzz adhering to the seed after the upland cottons are ginned, are utilized for cotton batting, paper stock, etc. The hulls yield bran, which is an important cattle food, fiber for high-grade paper, fuel, and ashes which may be used as a fertilizer. The meats when crushed and pressed yield about 300 pounds of oil and 800 pounds of cake. The cotton seed cake is utilized as a feeding stuff and as a fertilizer and takes high rank as both, but care must be taken in feeding not only on account of its

being a highly concentrated food but on account of certain deleterious principles found in the seed. The crude oil when clarified gives soap stock and various grades of oils. These oils when still more refined give us salad oils that a connoisseur can hardly distinguish from the best olive oils, cottolene, oleomargarine, miner's oil, and soap. Of course in the manufacture of some of these substances other articles are added but the basis is cotton seed oil. When the crude oil is first expressed, it is of a dark red or a nearly black color. The coloring matter is composed of an oxidizing and an unoxidizing material, the former being of a fine purple or violet blue color and the latter a golden yellow. The latter, under the name of gossypin, is used as a coloring material in various industries, it being insoluble in water and dyeing well on both wool and silk.

Going back to the fiber once more, some of the less common uses may be mentioned. The cotton fibre is composed of almost pure cellulose. If immersed in the proper proportions of sulphuric and nitric acids, washed thoroughly and dried, we have gun-cotton or pyroxylin, as it is technically known. If gun-cotton be dissolved in ether we have collodion, the uses of which you are more or less familiar with. If potassium iodide be added to collodion and the emulsion spread upon a glass plate and then dipped into a solution of silver nitrate a photographer's plate is secured.

The principal product of the plant, the cotton of commerce, has been known from very ancient times and its consumption has kept pace with the progress of the arts and with civilization. In what land and at what period of antiquity cotton was first used will perhaps never be known. It is not a native of a single region nor was its early use confined to a select tribe or race of people. Hindoo literature mentions cotton weaving at least 30 centuries ago and Peruvian and Aztec burial customs have preserved to us cotton cloth from early times. HERODOTUS, writing of India, which he is thought to have visited about 450 B. C., says "There are trees which grow wild there, the fruit of which is a wool, exceeding in beauty and goodness that of sheep.

The Indians make their clothes of this tree wool." Again he speaks of Xerxes' army being clothed in cotton clothes. THEOPHRASTUS, who wrote more than 300 years B. C., mentions, in his History of Plants, the growth of cotton in India and says "The trees from which the Indians make cloth have a leaf like that of the paper mulberry. They set them in plains arranged in rows so as to look like vines in the distance". ARISTOBOLUS, a contemporary of ALEXANDER the Great, and NEARCHUS, his most famous admiral, both mention the use of cotton in such a way that no mistake in the identity of the plant can be made. PLINY also describes the plant and QUINTIUS CURTIUS does the same. These and many other references show that the production of cotton cloth was an important industry in India for perhaps 1,500 years before the Christian era and for an equal number of years after, India was the center of the cotton industry. Here with a short staple cotton, primitive distaffs, and rude looms, fabrics were produced of such fine quality as not to be equalled until within the last half century. The fineness of some of these goods seems to have impressed all early visitors to the Orient and their descriptions seem almost meaningless or merely poetic fancy. One writes that "When their muslin is laid upon the grass to bleach and the dew has fallen upon it, it is no longer discernible". Another calls them "Webs of woven wind". Asia seems to have been the continent and India the country where this important product was first utilized in the Old World, but we find it was growing and being used in the New World at the time of the Discovery and the leaders of the various Spanish Conquests in the New World found it furnishing the principal raiment wherever they went. It seems probable that an article so admirably adapted to supply man with clothing must have had several independent origins. The material was the same, the wants the same, and man's inventive genius quickly utilized what nature had primarily intended, in the economy of the plant, for another purpose.

Much discussion has taken place as to the early presence of cotton in Egypt. Mummy cases have been rifled and burial

clothes examined by the microscope and with chemical reagent in the hope that this question might be solved. The weight of the evidence seems to show that the burial wrappings from the early Egyptian tombs are linen but this does not necessarily imply that cotton may not have been used for other purposes while interdicted for use in burial by religious or other ritualistic regulations.

Whatever may have been the distribution of cotton prior to that time, we certainly find the conquest of India by ALEXANDER served to give great impetus to its spread, for PLINY and others writing about 400 years later, or near the beginning of the Christian Era, mention the cultivation of this important crop in many regions. It has since spread until now the cotton belt may be said to extend around the world, embracing 35 degrees of latitude on each side of the equator. Various modifications due to economic and climatic conditions are known to exist in this wide belt but of these we may speak in another place.

The genus Gossypium to which cotton belongs is separated from the other genera of the Malvaceæ by the presence of three, sometimes in cultivation four, leafy bracts that subtend the calyx, and by the seed being more or less covered with wool. These bracts are usually rather large and coalescent, their free ends being more or less dentate, lacinate, or sometimes nearly or quite entire.

It is when one undertakes to describe the species of Gossypium that real trouble begins. On account of their great variability the species are difficult of limitation and numerous attempts have been made to classify them. LINNÆUS described five species. LAMARCK added three to this number and POIRET four more. In 1824 DECANDOLLE enumerated 13 species in the Prodromus and ROXBURG added two more. Eight others were included with the above list by WALPERS, and AUGUSTINO TODARO, who published in 1877 a very exhaustive monograph of the genus, described 52 species with two more classed as uncertain. In that monumental work of systematic botanical

bibliography, Index Kewensis, 42 species are recognized, very few of which are of economic importance, and mention is made of 88 others that have been reduced to synonyms, most of them being synonyms of species in cultivation. Dr. BUCHANON HAMILTON sought to simplify the matter by reducing all cultivated form to three species, *G. album* if the seed bore an inner layer of very short, closely adherent lint, as is the case with the Indian and the American Upland cottons, and *G. nigrum* if the seed is black after removing the long, fine lint, as is the case with Sea Island and Pernambuco cottons. A third species, *G. croceum*, depended upon the tawny character of the lint. This very simple classification would have proved most excellent had it not been for the fact that the black seeded cottons would under some conditions develop an abundant inner lint, and tawny cottons, commonly called Nankeen, are not uncommon colors for the lint of both of the other species. The great variability and tendency to hybridize make it very difficult to determine as to what species a given plant may belong. No cultivated plant responds so quickly to ameliorated conditions of soil, climate, and cultivation as does the cotton plant and to this fact is due much of the confusion as to species and varieties.

The two great types of cultivated cottons are: those having the individual seed free from one another, and those in which the seed of each cell are more or less adherent in a reniform mass. From this character this group is commonly referred to as the kidney cottons. For the most part the plants of this group are perennial and are grown in tropical or subtropical regions. The plants are pruned each year after the second or third and continue to yield profitably for from five to eight years. In this country only the herbaceous cottons are grown and your attention is especially invited to this series, leaving aside the interesting group of arborescent forms, the growing period of which is too long for our climate. The two classes of cotton grown in this country are Sea Island and the Upland, popular names derived to some extent from the regions in which they are cultivated. These are usually said to have been derived

from the two species, *Gossypium barbadense* and *G. herbaceum* respectively,

The celebrated Sea Island cotton that is grown to such superior excellency along the South Carolina and Georgia and Florida coasts is by almost unanimous consent believed to be derived from *G. barbadense.*

The source of the upland cottons of this country and the vast series of forms grown in India is of less certainty and this is one of the puzzles that will perhaps never be solved. Most of the American botanists have considered the various forms of upland cotton to have been derived from *Gossypium herbaceum*, while many European and Asiatic students of the subject maintain that *G. herbaceum* is an Asiatic species. There has been described a species, *G. hirsutum*, which is now generally considered a synonym of *G. herbaceum.* This is said to have been described from America and some botanists propose it as the original of the American short staple cottons as distinguished from the long staple or Sea Island. If this view be accepted and the synonymy recogized, we have an example of simultaneous evolution of a species in opposite portions of the globe. The writer is inclined to believe that what is generally called *G. herbaceum* is not a definite species but it has been developed by cultivation and selection from perhaps a number of species and it represents not a well marked species but a group of hybrids and forms more or less closely related. Nor is he willing at this time to agree with ROYLE that *G. barbadense* is the source of all American cottons. The differences between the long and short staple cottons are so marked as to seem to be fundamental. It is true that numerous hybrids between the two have been produced but it requires more than change of location and method of cultivation to overcome the radical differences between the short staple upland cotton with its green seed and closely adherent fuzz, and the long staple Sea Island with its smooth, black seed.

The weight of evidence seems to indicate that Sea Island Cotton originated in some of the lesser Islands of the West Indies and

it appears from some old records that it was brought from the island Anguilla to the coast of the Southeastern United States in 1789. This was the *Gossypium barbadense* first described by PLUNKENET in 1695 and the name was retained by LINNÆUS. Whatever its origin, it is the most excellent of all cottons and has been introduced under various names into nearly every cotton growing region, being known as Barbadoes cotton, Mauritius cotton, Bourbon cotton, etc., dependent upon the place whence the seed was obtained. It has been successfully introduced into Algeria and Egypt, and for some purposes the Egyptian varieties developed from American seed compete very successfully with the product of our coast country. According to HUMBOLDT, Sea Island cotton requires a climate ranging from 68° to 82° F., and the best conditions for its growth are found below 34° North latitude. The upland cottons can be grown at higher latitudes, a summer temperature of 73° to 75° and a winter temperature of about 46° or 48° F. being its limiting condition of temperature. Cotton is economically grown in the United States as far north as 37° N. L., 40° in Europe, and 46° in Astrachan. It has been successfully grown in the United States as far north as Pennsylvania and Delaware, but the conditions are such as to make it no longer profitable. It has been said that at the time of the Revolution the home grown cotton was sufficiently abundant in Pennsylvania to supply the domestic needs of the state, and as late as 1864 upland cotton was one of the most profitable crops on the eastern shore of Maryland. As regards elevation, HUMBOLDT states that cotton is grown at an elevation of 9,000 feet in the tropics. In Mexico at 19° 22′ N. L., it flourishes at 5,500 feet and in the Himalayas it has been grown at an elevation of 4,000 feet. However, the best cotton in the world, the Sea Island, comes from the low lying islands along the coast of South Carolina and Georgia and Florida, where the land is but a few feet above sea level and where at times the tides and storms drive salt water over the fields. In Egypt the best product comes from the Delta region, while the Mississippi Delta is also famous for the quality of its

product. It is often claimed that the quality of cotton improves in proportion to its nearness to the sea. That more than proximity to the sea is required is shown by ROYLE, who says that the Pernambuco cotton is improved as the cultivation recedes towards the interior. He also states that latitude cannot affect the quality to any appreciable degree, for about the poorest cotton in the market comes from Java where it is grown nearly under the equator, while that of Guiana and Brazil, of nearly the same latitude, ranks second in quality. The product grown on the island of Jamaica at about 20° N. L., is far inferior to that of Demerara nearer the equator. In India, in closely contiguous provinces, the character of the staple varies widely, and as has already been said, the best in the market comes from South Carolina and Georgia near the northern limit of profitable growth.

According to HEUZE the time required for the maturity of a cotton crop is divided about as follows: From seeding time to flowering, New Orleans 80 to 90 days, Sea Island 100 to 110 days; from flowering to maturity, New Orleans 70 to 80 days and Sea Island about 80 days, making the total growing period of from five to six months. The same authority says that the best average daily temperature for the growth of the cotton is from 60° to 68° F. during the period of from germination to flowering and from 68° to 78° F. from flowering to maturity. Dr. WIGHT, in accounting for the very manifest inferiority of Indian cottons, as compared with American fiber when grown from the same lot of seed, says it is due to the fact that under the conditions in which cotton is grown in India there is a constantly diminishing temperature instead of an increasing one during the period of greatest growth.

Too much moisture is detrimental to the production of a good crop, in that it tends to greatly increase the vegetative growth of the plant and causes too great production of bolls for perfect development. On the other hand a drouth is equally as harmful in its effect in reducing the number of bolls set. Different varieties vary in the degree of moisture and dryness best suited

to their growth, so that what is just the right degree for one may prove excessive for another. It is only by careful attention to all the requirements of the plant that the best results are secured. As an example of what well directed efforts may accomplish in improving the quality of this crop, your attention is invited to one of a number of instances known to the writer. On James Island, just across the bay from the city of Charleston, S. C., Mr. W. G. HINSON produces a quality of Sea Island cotton that commands a price usually about three times that of the ordinary market crop, and buyers are always anxious to secure the output of his plantation. He has succeeded in breeding up a race of unexcelled merit in the following manner. Each crop is grown from seed the original parents of which were chosen three years before. Shortly before time for the first gathering he goes through his fields and selects the plants which most nearly approximate to his ideal of form, vigor, productiveness, and quality of staple. From these plants the seed are saved and planted the next year in a field to themselves. Again the selective process is repeated and all plants that have departed from the ideal are pulled up and thrown away, only a select few being left for the second year's planting, which is a repetition of the first. From the accepted plants of the third generation the seed is gathered for the main crop. This method has been rigorously followed since shortly after the Civil War and combined with the most intensive methods of culture Mr. HINSON makes cotton growing very profitable. So famous have his strains of Sea Island cotton become that the entire crop of seed is sold for planting not only to his neighbors but is sent to remote parts of the world.

Many wonderful tales are printed in the agricultural press respecting the origin of some of the more or less highly prized varieties. For several years the Bamia, a highly prized Egyptian cotton, was popularly believed to be a hybrid between Sea Island cotton and Okra and at the present time there is being exploited in certain portions of the South a so-called "limbless cotton," the advertised history of which embraces the hardships

and dangers of a trip to Central Africa and the wreck of a ship, resulting in the loss of all but a few seeds, etc. While both of these varieties have desirable qualities, it is well known that they are the results of selection and the stories were invented for selling purposes only. This fictitious practice is not of recent occurrence only. Tales quite similar account for the origin of varieties now more than half a century old. One is that seed was sent from Mexico to this country in the bodies of dolls, the government forbidding the sale or export of seed of this valuable variety.

In 1896 the United States Department of Agriculture attempted to record the varieties of cotton in cultivation at that time, and 130 more or less distinct forms were described. As illustrating the instability of varieties it may be of interest to state that of the 58 varieties mentioned in the Tenth Census not more than 15 have been grown during the past ten years and only six varieties which were popular in 1880 are in common cultivation at this time. While particular varieties may disappear in a short time, the general type is preserved and it is said that the varieties of Indian cotton that have descended from American seed sent there in 1844 have returned practically unchanged and the type can readily be recognized in varieties once common in this country.

The first thing noticed in comparing samples of cotton is the difference in length and fineness of the fibre, and upon these factors the commercial grading of the crop almost entirely depends. The principle varieties of cotton vary in respect to the length of the fibre within rather constant limits, dependent upon soil, culture and atmospheric conditions. The fibre of Sea Island cotton averages 1.6 inches in length, Egyptian 1.4 inches, New Orleans and Texas 1 inch, and Upland 0.9 inch. Native Indian varieties average 0.8 inch or less, while fibre grown in India from American seed is usually about 0.1 inch shorter than the same grown in this country. In diameter the fibres vary from .0006 inch in Sea Island to .00084 in native Indian cotton, or from $\frac{1}{1600}$ to $\frac{1}{1200}$ of an inch in diameter. In general the

longer the fibre the less its diameter, and there is a greater variation in diameter than in length of fibre.

The growth and structure of the fibre is quite interesting. If a very immature boll be cut transversely, the cut section will show that it is divided by longitudinal walls into three or more divisions and the seed will be seen attached to the inner angle of each division. The seeds retain this attachment until they have reached a nearly mature size and the growth of lint has well begun. The attachments to the ovary wall are now absorbed and by the increasing growth of the lint, the seeds are forced to the center of the cavity. The development of the fibre begins at the end of the seed farthest from the attachment and gradually spreads over the seed as the process of growth continues. The first appearance of the fibre occurs a considerable time before the seed has attained its full size and seems to commence with the development of cells on the surface of the seed. These cells have their origin in the second layer of tissue and force their way through the epidermal layer which is gradually absorbed. The cells which give rise to the cotton fibre are characterized by the thickness of the cell wall when compared with their diameter.

In their earliest stages the young fibres are circular in section but with their increase in length the walls for a time become thinner and collapse. With the opening of the boll there is a condensation of the liquid cell contents, which by being deposited on the inner side of the cell walls gives them greater thickness and density. BOWMAN, claims that this deposition, which is unequally effected, and the pressure in the boll aids in causing the twist of the fibre. The twist in the fibre seems to be an acquired character not possessed by many of the wild cottons, and it is this character that readily distinguishes the cotton fibre from all others of animal or vegetable origin, and to this is due its adaptability for spinning. Other plants, as the silk cotton tree, *Bombax ceiba*, the *Eriophorums*, and the milk weeds, have fibres as long and delicate as cotton fibres, but lacking the twist they have not been successfully spun into thread or yarn.

The fertilization of the flower offers some interesting phases. The mallows are generally said to have their pollen ripened before their stigmas are receptive. BARON VON MUELER in his Select Extratropical Plants says "The flowers of *Gossypium herbaceum* are fertilized by visits of the ruby-throated humming bird and by numerous insects." Dr. WILLIAM TRELEASE, who has made an extensive field study of the subject, says, "The reproductive organs are so placed that on the expansion of the corolla, pollen is usually deposited on the stigmas, self-fertilization being thus secured." The corolla of the Upland cotton is generally of a creamy-white color when it first opens, later in the day it becomes tinted with pink or rose, and on the second day it becomes a deep rose when it falls to the ground. When self-fertilization is apparently the rule, the reason for such a conspicuous flower seems unnecessary. DARWIN has shown, however, that when fertilization is provided for, occasional crossing is often of sufficient importance to warrant the production of large and conspicuous corollas and the presence of nectar and fragrance to induce animals to visit the flowers, thus securing cross-fertilization. According to Dr. TRELEASE this is what is done in the present case. He says, "There is reason for believing that fertilization occurs during the first day of blooming, and this being the case, insects are not needed by the flower more than a day old." But why should the color change so markedly as the flower advances in age? Many cases might be cited where the color of a corolla is intensified after the fertilization of the flower. The most satisfactory explanation of this phenomenon is "that by their varied, lasting, and augmented coloration, flowering-visiting animals are attracted to the plant, but instinctively, or by experience, only the younger flowers are visited, the guest readily distinguishing them from the older ones by their color." Although the flowers are said to be self-fertilized, Dr. TRELEASE reports noticing many insect visitors. Honey bees, bumble bees, sand wasps, beetles, butterflies, as well as a number of other insect visitors are recorded. They are plainly attracted to the flowers either for nectar or pollen,

both of which are abundant. "In thus collecting pollen and nectar, these insects, with the exception of the butterfly, coming in contact with both anthers and stigmas, become well dusted with pollen, which necessarily was transferred from flower to flower." In this way self-fertilization is unquestionably assisted and many crosses doubtless result.

Having paid considerable attention to the early history of cotton and sketched at some length the more important botanical facts connected with the plant, let us, before closing, consider briefly some of the economic facts pertaining to the cotton industry. Cotton growing is an important industry in about a dozen different countries, the most important of which, in order of production, are the United States, India, Egypt, Russia, Brazil and the West Indies.

Of a world's production in 1895 of abou t13 million bales, the United States produced about 9 million bales of which nearly three-fourths were exported, the value of the exports being in round numbers 200 million dollars. While Sea Island cotton has been cultivated in the United States but little more than a century, upland cotton has been grown almost from the time of the settlement of Jamestown. In 1784 eight bags of cotton shipped to England were seized on the ground of fraudulent importation, the laws of England at that time requiring imports to be carried in the ships of the country from which the product was exported. The excuse given for the seizure was "That so much cotton could not be grown in the United States."

Cotton was grown for about 175 years in this country before the industry became at all important, and the history of the extension of this crop through the Colonies and States is extremely interesting but lack of time urges us to hasten on.

The great stimulus to cotton production was the invention of a number of machines whereby the cost of production and ability to handle the crop were materially changed. The jenny of HARGRAVES (1767), the frame of ARKWRIGHT (1769), the mule jenny of CROMPTON (1776) and the power loom of CARTWRIGHT (1785-92) so revolutionized the manufacture of

cotton fabrics that the supply of cotton must of necessity be increased to meet the demand. Hand picking and crude implements for separating the fibre from the seed had about reached the limit of their ability to supply the market when WHITNEY'S sawgin (1793) rendered it possible to meet the increased demand and the American production was increased more than 1100 per cent. in ten years. By the steady advance in the efficiency of machinery, the extension of the cotton area and better methods of cultivation, the annual cotton crop of the United States is now nearly 11,000,000 bales of 400 pounds each. India produces about 3,000,000 bales a year and Egypt a little less than 1,000,000 bales. During the Civil war, when exportation of cotton from this country was shut off and the price jumped from 13 cents a pound in 1861 to over a dollar a pound in 1864, great efforts were made in many countries to build up a cotton trade that would eventually supplant the American. So long as prices were abnormally high, cotton was grown in the whole Mediterranean region, Indian production was stimulated, and Australia was lauded as the future empire of King Cotton, but with the return of peace the planters repaired to their plantations and within less than ten years we were exporting more than before and at the same time home consumption had increased with even greater rapidity. The United States thus quickly reasserted her supremacy in cotton production. Can she maintain it in the future? For the near future she unquestionably can if she so desires, but it must be recognized that Brazil and Mexico on this continent have vast possibilities if properly developed, and the Dark Continent may learn to utilize the vast areas of agricultural lands said to exist in the Soudan and elsewhere. Asiatic Russia is advancing rapidly and the production there has increased so that Russian imports have fallen off 50 per cent. in ten years. These countries together with Egypt and India, to say nothing of the unknown possibilities of regions south of the equator, may in time compete closely with us in production of raw cotton, but perhaps by that time the whir of countless spindles and the hum of many looms may

take the place of the shout and song of the field hand and this country become the cotton manufacturer for the world.

The PRESIDENT. There is opportunity for any who are interested in this subject to ask any questions of Dr. EVANS. Shall we proceed to the next paper? American-grown Egyptian Cotton, by Mr. LYSTER H. DEWEY, of the United States Department of Agriculture. [Applause.]

AMERICAN-GROWN EGYPTIAN COTTON.

LYSTER H. DEWEY, Washington, D. C.

ORIGIN.

Nearly all of the fifteen or twenty varieties of cotton now cultivated commercially in Egypt have been developed more or less directly from the Sea Island cotton of this country. One or two varieties are said to have been obtained from cotton grown in India, but these have doubtless been cross-fertilized with pollen from other Egyptian varieties giving a strain of the Sea Island type. Although different varieties of Egyptian cottan differ from each other in habit of plant and character of lint quite as much as do the different varieties of American upland cotton, they all exhibit in a more or less marked degree characters akin to those of the Sea Island cotton.

DESCRIPTION OF PLANTS.

The plants are generally large with long graceful limbs. The flowers are large, of a beautiful yellow color, remaining half expanded in the form of a bell. They are followed by comparatively small bolls, which in nearly all cases are only "three-locked", that is, have only three cells or parts to the seed-pod, instead of five, the usual number in the bolls of our upland cotton. The seeds are black or coffee colored and nearly free from adherent fuzz, except a tuft of green at one end in some varieties. In all of these characters Egyptian cotton resembles Sea Island cotton, indicating plainly their close relationship.

An examination of five living plants, taken this morning from the trial grounds of the Department of Agriculture on the

Potomac flats, will bring out more clearly some of the differences between American upland, Sea Island and Egyptian cottons. This plant, eight feet high, limbless, and bearing bolls in pairs or clusters is a typical specimen of an Egyptian variety called "Bamia". Among Egyptian cottons this variety is second only to "Mit-Afifi" represented by this shorter branching plant. Both of these plants are truly American-grown Egyptian cottons, being produced from seed acclimated by six successive generations of growth in Texas. There is a plant of "Mit-Afifi" produced from seed imported last spring from Egypt. You will observe that it can be scarcely distinguished from the plant of Texas Mit-Afifi and also that it closely resembles Sea Island, which isre presented by the "Black Rattler", this slightly smaller plant, while it is quite different from this shorter but more stocky, branching plant of "Truitt's Improved", representing the typical form of one of the leading varieties of American upland cotton. Please note the yellow bell-shaped flowers, the long leaves, and the small pointed bolls of the Egyptian and Sea Island varieties as compared with the white open flowers, broad leaves and large rounded bolls of the upland cotton. The limbs of Mit-Afifi and Sea Island would have been longer if the plants had been less crowded. This American upland plant has two open bolls. No open bolls are to be found yet on the fifteen varieties of Egyption cotton or the Sea Island cotton which we are growing on the Potomac flats.

THE LINT.

There are points of resemblance in the lint also, yet we find here greater diversity than elsewhere in the plants. The peculiar characters found in the lint have made Egyptian cottons a class by themselves. These peculiar characters of lint have made and maintained a market for it even here in the United States, the greatest cotton-growing country on the globe. Some mills even in the Southern States, literally surrounded with great cotton plantations, are importing from Egypt, cotton for use in the manufacture of special kinds of goods.

The lint, averaging about 1.4 inches in length, is about 0.2 inches shorter than average Sea Island, and about 0.5 inch longer than the average American upland cotton. Several long staple cottons cultivated in this country exceed the Egyptian in length, and the Sea Island and long staple varieties usually exceed it in fineness.

The characters that render it especially valuable are its strength, combined with softness, lustre, elasticity, its soft oily feeling, its ability to take dyes, and its well developed twist. Although resembling the lint of Sea Island cotton more than that of American upland, it has developed fixed characters which clearly distinguish it from the lint of any cotton grown on a commercial scale in this country.

I will pass around some of the specimens of lint from central Arkansas and northern Georgia produced this season from seeds imported last spring. In this box is a sample of lint from plants of the sixth generation in America, raised by Mr. WENTWORTH in Texas.

CONDITIONS IN EGYPT.

These peculiar characteristics have been produced by many years of cultivation in Egypt, where the conditions are radically different from those in the cotton-growing states in this country. Nearly all the Egyptian cotton is grown in the Nile Delta between Cairo and Alexandria, and in the province of Fayoum on the west side of the Nile about forty miles above Cairo. It is all grown under irrigation. From the time the cotton plants are up in March until the last lint is picked in November there is practically no rain in Egypt. The annual rainfall at Cairo is only 1.5 inches, and at Alexandria on the coast only 7.8 inches. Nearly all of this rain comes during the winter months. The air is exceedingly dry. Even the records from Phœnix, Arizona, do not indicate a mean relative humidity as low as that in Egypt. The temperatures in Egypt usually exhibit a wider range between daily maximum and minimum, or the warmest part of the day and the coldest at night, but the average is not essentially differ-

ent from the average temperature in the Gulf coast region. The soils on which cotton is raised in Egypt are usually very fertile, but often decidedly alkaline.

These conditions have produced Egygtian cotton in Egypt. They have produced a fiber that for certain purposes is superior to any other fiber known.

DEMAND.

The demand for Egyptian cotton is increasing, and it seems likely to so continue as long as there is a demand for fine qualities of knit goods and for mercerized cotton and other novelties for which this fiber seems best adapted. Its production in Egypt is limited to the area that can be irrigated. The greater portion of this land is said to be now occupied, therefore no very marked increase in its production may be expected from that source. It has not been grown commercially elsewhere, and it is doubtful whether conditions, including climate, soil, labor and directive talent, can be found in other countries more favorable for its production than in the United States. The demand for Egyptian cotton is increasing in Europe, and there appears to be a good prospect of a ready market for all good fibre of this class that may be produced.

CAN IT BE PRODUCED IN THE UNITED STATES?

The question as to whether or not it can be successfully and profitably produced in this country seems well worthy of consideration by the planters, and it is also a question that should deeply interest the spinners. This question involves two important corollaries. (1) Can a fibre be produced here which will be of the same quality as that imported? (2) Can the plants producing this fibre be made to yield it in such quantities that the cultivation of Egyptian cotton shall be as profitable as the cultivation of upland cotton or of other crops? Numerous trials have been made, but the second corollary has not yet been answered definitely.

FIG. 1.

Egyptian Cotton, variety known as "Jannovitch", showing resemblance to Sea Island Cotton in forms of leaf and flower.

FIG. 2.

Sea Island Cotton. Flowers (yellow) bell-shaped.

FIG. 3.

American Upland Cotton, unlike Egyptian Cotton in the short, broad lobes of the leaves and the open flowers. (Flowers white, changing to pink.)

EARLY EXPERIMENTS.

As early as 1867, seed of Egyptian cotton was imported by the United States Department of Agriculture and distributed among the planters of the South. The results of more than fifty trials, made in all the states from North Carolina to Texas, are contained in the reports of the Department of Agriculture for 1867 and 1871. In one or two instances in southern Louisiana the cotton proved satisfactory, but in most instances it produced little or no lint. The plants were generally found to be vigorous and drought-resistant, and to have many superior characteristics even where little or no lint was produced. Where the longer seasons permitted the lint to mature, it was recognized as finer, stronger, and in many respects better than that produced by American upland cotton.

RECENT INTRODUCTION OF SEED.

No further extensive experiments in co-operation with the general government were undertaken until 1892. In that year and during the two succeeding years the United States Department of Agriculture imported and distributed seeds of three varieties of Egyptian cotton, Abbasi, Bamia, and Mit-Afifi. These were tried at the Experiment Stations in each of the cotton-growing states, and also on many private plantations. In nearly all instances where results were reported, the trials were regarded as failures. Very few of the private planters saved seed for further trial. In southern Texas, Mr. W. H. WENTWORTH, attracted by the superior quality of lint, saved seed and continued the cultivation, although he obtained the first year only 75 pounds of seed cotton from three acres. In 1895 Mr. WENTWORTH cross-pollinated Mit-Afifi Egyptian cotton with Myer's Big Boll, a Texan variety, obtaining a hybrid which produces larger and more numerous bolls and a fiber almost like the imported Egyptian, except that it is lighter in color than Mit-Afifi. Continued selection from the best plants produced by this hybrid have developed a promising and pretty well fixed type.

Last spring seeds of five different varieties of Egyptian cotton

were imported and sent out for trial by the Section of Seed and Plant Introduction in the Department of Agriculture. One of these varieties, known as "Jannovitch", is of recent development in Egypt, where it is claimed by the best planters to have superior merits. This was sent for trial to nearly one thousand different planters in the Southern States. Comparatively few reports of these trials have been received as yet, as the season for picking is scarcely over and most of the reports will be deferred until the cotton is ginned. In the coast regions of Texas, where the conditions in normal years are more nearly like those of Egypt than are those of other cotton-growing regions, the trials this year were ruined by excessive rains, insects, and in a few instances by the Galveston storm. In spite of unfavorable conditions, 80 pounds of seed cotton were obtained from one small plat of less than half an acre at Victoria, and the seed will be saved for next year's planting. A few plants grown at Lake Charles, Louisiana, grew to a height of five to eight feet, and produced an abundant crop of well developed bolls. At Belle Hellene, twenty miles below Baton Rouge, an acre of Jannovitch cotton planted in rows six feet apart attained a height of six to twelve feet, but the bolls were comparatively few and scattered on the long, slender branches. At Judsonia in the White River Valley in Arkansas a planter who made a very careful test of the Jannovitch cotton claims that he can easily grow it there so as to produce at least half a bale per acre. Very favorable reports have also come from Godwinsville in central Georgia, from one or two points in the coast region of the Carolinas, and from Abbeville in southern Louisiana. No definite reports have thus far been received from Florida or from the irrigated regions in Arizona and California.

EXPERIMENTS IN HYBRIDIZATION.

For the purpose of obtaining varieties of cotton adapted to the conditions in this country, more prolific than that grown from imported seeds and yet producing the superior qualities of lint, efforts are being made to breed up new types by means of

hybridization and selection. Prof. P. H. MELL, director of the Experiment Station at Auburn, Alabama, has been carrying on work along these lines several years with very promising results. During the past three years Mr. H. J. WEBBER, in charge of the work of plant breeding in the United States Department of Agriculture, has conducted some very careful experiments in hybridizing cottons. It requires several years of careful selection to fix types thus obtained, but the objects sought are well worth the effort, and it is even possible that a lint may be produced by this means in the United States which shall be superior to that imported.

OBSTACLES YET TO BE OVERCOME.

Although much progress has been made, there are still some difficulties in the way of commercial production of Egyptian cotton in this country. One of the most important difficulties is the low yield as compared with American upland cotton. In Egypt it is claimed that a yield of 500 to 600 pounds of lint, or somewhat more than a bale per acre, is obtained from the best varieties on average soils. The highest yields of Egyptian cotton in this country, so far as recorded, are little more than half a bale per acre, while two bales per acre of American upland cotton are often obtained under particularly favorable conditions.

A second difficulty is found in the small bolls. Cotton pickers object to picking the cotton from these small bolls, which contain but little more than half the amount of lint obtained from upland cotton. The bolls are usually scattered on the large spreading plants, which increases still further the difficulties of picking.

In this American upland plant it will be observed that the bolls are large enough and thick enough to be plainly evident and a person does not have to walk clear around the plant in order to be able to pick it. The Egyptian plants grow to such a height, so large and spreading, that it is more difficult to pick the cotton. Furthermore, our American cotton fluffs out. Nearly all our

cotton in the South is picked by colored people, and they like to see what they are going to get. The Egyptian cotton grows very compact, and although it weighs more in the picking bag than the same bulk of upland cotton, it does not make so much of a show. They will rarely pick this for less than $1.00 per hundred pounds, while the price for upland ranges from 40 to 75 cents per hundred pounds. I will pass around some samples of bolls. These long pointed bolls are of Abbasi and are among the largest produced by Egyptian varieties. These are Russell's Big Boll and are types of the largest American upland. Our American cottons sometimes have five, sometimes four locks to the boll; the Egyptian almost universally only three.

The results of experiments in careful selection carried on thus far seem to warrant the hope that these objections may be overcome. By carefully selecting seeds for planting with these definite objects in view more prolific plants may be obtained, with larger bolls and a more compact habit of growth. It is not to be expected that Egyptian cotton may be grown successfully in all parts of the cotton belt. The long staple cottons which thrive in the alluvial soils of the Mississippi delta do not grow well in the red clay hills of the Piedmont region.

Scarcity of labor and high freight rates may prevent the profitable production of this cotton at the present time in some of the irrigated regions of the Southwest adapted to its cultivation.

These objections are not insurmountable, however. Indians may be taught to pick cotton as they now pick hops on the Pacific coast. In fact, the Moqui Indians of Arizona have cultivated cotton for domestic use ever since the white people have known them. If freight rates are too high to bring the lint east, mills may go where the cotton is raised, as a mill has gone to St. George in southwestern Utah.

A roller gin must be used to obtain lint of the same quality as that imported from Egypt. There are at present few roller gins in use in this country outside of the coast region of South Carolina, Georgia and Florida, where Sea Island cotton grows, and a very small number in the Delta region, used to gin some

of the long staple varieties. Inventive genius is at work on roller gins, however, and if there should be a demand for them, there is no doubt but that better gins will be supplied than are now used in Egypt.

The last serious difficulty that I shall mention in the way of American-grown Egpytian cotton is the market. One planter, who has been offered 15 cents per pound in the Memphis market for his Egyptian cotton grown this year, asserts that if he could be assured of a certain market for this kind of cotton, he would make it his principal crop. It has been difficult for those who have raised a small quantity of Egyptian cotton in an experimental way to obtain a market for it, or even obtain an estimate as to its value. Cotton buyers do not like to handle the small lots for which there is an uncertain market, and spinners do not want it for fear it will not be of even quality, or can not be used together with the imported fiber.

To overcome this difficulty, manufacturers and growers must come into more direct communication. It may well repay a manufacturer to sacrifice a little time to examine and pass judgment on a few samples of lint, if by this means the cultivation of products which are now imported may be encouraged.

The PRESIDENT, Is there any one who desires to ask any questions touching the subject? If not, the next paper in order is, America's Textile Industry.—A Southern View, by Mr. RICHARD H. EDMONDS, of Baltimore, Md. [Applause.]

Mr. RICHARD H. EDMONDS. Five years ago, when at Atlanta, you did me the honor to ask me to read a paper on The Growth and Development of the Textile Industry in the South. At that time the South had three million cotton spindles, and it

was regarded as somewhat of a visionary prediction when it was stated that by 1900 the South would probably have five million spindles. The five million mark has been more than reached. On September 1, 1900, the South had 4,800,000 spindles in operation and 1,500,000 spindles were being added to new and old mills, which will give it for the present season practically 6,000,000 spindles in operation. It is not, however, so directly of the South or the growth of the South that I want to talk today, but rather to present a few points that bear on the past, the present and the future of the American textile industry. I speak to men who know it from practical experience — men who know far more than I do about the practical side of it, but there are some phases of the old or ante-bellum South which bear on the future of this industry possibly not generally understood. They indicate that the progress of today is but a revival of the spirit then prevailing and in this light are of national interest.

AMERICA'S TEXTILE INDUSTRY.—A SOUTHERN VIEW.

RICHARD H. EDMONDS, Editor of the Manufacturers' Record,
Baltimore, Md.

On October 15th, 1849, a resident of Florence, Ala., discussing the relations of the North and South and the coming industrial development of the South, and recognizing the interdependence of various parts of the country, showed his foresight in the following words:—"Already I hear the notes of preparation, but it is not the clash of arms or the shrill notes of the clarion that fall on the ear. It is the sound of the loom and the artisan's hammer; it is the heavy breathing of the steam engine and the whirling of water wheels. They are preparing to throw off the shackles of dependence, to manufacture their own goods and to use their own ships."

These words but typify the awakened industrial spirit of the South, which in the early days of the colonies had been as strong even as in New England, but which for the first half of this century had found its field of activity in great plantations rather than in great factories. Once again, however, the tendency had turned to factories, and a dozen or more great conventions were held in the South between 1840 and 1857 to encourage the development of manufactures, the building of railroads, and the upbuilding by Government aid of American steamship lines. These words were uttered at a time when this movement for independence of the South from a commercial and industrial standpoint was about to be converted into an instrument in aid of the attempt at political independence. As so often happens in the clash of political ideas and material interests, the situation

fifty years ago resulted in a temporary set-back for the latter. Had the view of the Florence prophet and others of his faith prevailed, had the struggle between the North and the South been one of loom against loom, hammer against hammer, steam engine and water wheel against steam engine and water wheel, the outcome would have been easy to predict. It would have been true then, as it is now, that the development of the South meant the enrichment of the nation, and hence it would have been to the best interests of both the North and South, and, consequently, of the whole country, for the South had begun to demonstrate its potentiality as a manufacturer, railroad builder and trader. It had even then given a striking illustration of its ability in the textile line. Between 1844 and 1850 its campaign for industrial independence had increased its consumption of cotton from 66,000 bales to 107,000, or nearly 20 per cent. of the whole amount consumed in the country, selling its goods through Philadelphia and New York. The quick strides made by the South during that period precipitated a debate in which AMOS A. LAWRENCE of Massachusetts, HAMILTON SMITH, a Northerner transplanted to Kentucky, Gen. CHARLES T. JAMES of Rhode Island, who was financially interested in Southern development, and WILLIAM GREGG, a pioneer mill builder of South Carolina, were the leaders. Writers from the Southern standpoint showed how rapidly the wealth of New England acquired through manufacturing was increasing, while the New England argument sought to prove that it was more profitable for the South to employ its energies in raising the raw material than to engage in manufacturing. Mr. LAWRENCE was inclined to be pessimistic, while General JAMES (an engineer by profession and an investor in cotton mills) was prone to go to the other extreme. In one of his letters Mr. JAMES said:—"Why does the South on the absorbing question of the day have to submit to the dictum of the North and West? Only because they have gained such a tremendous start in the industrial race, thereby drawing immense masses of wealth and population from every point of the compass, while the South

has been content to enrich the North with the fruit of her labors, and to offer no inducements for the prosecution of manufactures and mechanical industries."

GREGG, writing from practical experience in cotton manufacturing and careful observation of the effects of mechanical industry upon the material growth of New England, expressed the belief that the low estimates of dividends by LAWRENCE and the high estimates of profits by JAMES for Southern mills were not entirely accurate, but pointed out as advantages of the South over New England an abundance of labor, at least 20 per cent. cheaper than in New England; cheap provisions, water power to be had almost for the asking, and above all, "cotton at hand, sound, bright and unsullied by the rain, mud, smoke, etc., incident to its transit from the interior of our State to its final destination," and added: —"This last item alone is equal to a quarter of a cent a pound in our favor and explains what the generality of persons do not understand, why manufactured domestics are superior in quality to a similar style manufactured in the Eastern States. So far as our consumption is concerned, (which has not yet been reached by Southern production, and may not for many years to come), our advantages are too apparent to need argument. Add the transportation and charges both ways (the cotton going to the manufacturing district, and the cloth returning to us), and it makes a difference in our favor which foreigners can not overcome by superior skill, provided we exercise that caution in the first investment, which prudent men should do, and by such attention to the judicious direction of labor as is necessary to success on a cotton plantation."

The hopefulness of GREGG found its complement in the words of the *Dry Goods Economist*, which, in a position to speak authoritatively of conditions in the Northern and Middle States, saw in the 175,000 spindles then in operation in the South and the erection of new mills a menace to those of the North, and which said:

"This rivalry affects the old established factories the more that the

new factories are all armed with the newest improved machinery and will produce at probably 20 per cent. better advantage. The competition from this quarter is in every way calculated to diminish the old margin between the cost of raw material and that of fabrics; therefore, these old concerns, which had reached the minimum margin at which they could work, must shut up shop and give place to more competent operators."

One of the predominant ideas steadily advanced in this discussion by Southern men was that the building of mills would be a powerful factor in bettering the condition of thousands of the poorer whites. And it was everywhere recognized that the expansion of the textile industry would be accompanied by an upbuilding of other manufacturing industries for the utilization of the abounding mineral and timber resources of the South.

In these early discussions of Southern industrial development, which have a strangely familiar tone, even at this late day, of changed conditions, the cotton industry was given most attention. Its effects became apparent during the next decade, or from 1850 to 1860, in which the general industrial activity of the South made a decided advance. The capital invested in manufactures increased from $94,595,734 in 1850, to $167,855,-315 in 1860, the number of employes from 163,903 to 189,832, and the value of the products from $165,581,935 to $291,375,-413. This advance was made in the face of an almost continuous political campaign, especially active during the last five years of the decade. It was suddenly checked by the war, which not only destroyed the South's industrial interests, but utterly bankrupted that whole section, while the older textile and other manufacturing centers were given an enormous impetus by the war and by the industrial activity which followed it. Nearly twenty years or more had passed before the South was in condition to make any real broad progress.

By 1880 some little recuperation had begun. At that time the Southern States had 160 cotton mills, with 583,696 spindles and 12,194 looms using 188,744 bales of cotton, while the total number of mills in the country was 751, with 10,678,-

516 spindles, 227,156 looms, using 1,570,342 bales. By 1887 the number of mills in the South had increased to 249 with 1,213,346 spindles, while in the whole country there were 916 mills with 13,520,119 spindles. A fair estimate of the relative progress of the industry in the North and in the South since 1887 may be had in the following table, in which the figures for Southern mills represent actual consumption of bales, while those for Northern mills represent "takings":

Year ending August 31.	Southern Mills Bales.	Northern Mills Bales.
1887	401,452	1,710,080
1888	456,090	1,804,993
1889	479,781	1,785,979
1890	546,894	1,799,258
1891	604,661	2,027,362
1892	686,080	2,190,766
1893	743,348	1,687,286
1894	718,513	1,601,173
1895	862,838	2,083,838
1896	904,701	1,600,271
1897	1,042,671	1,804,680
1898	1,231,841	2,211,740
1899	1,399,399	2,190,095
1900	1,597,112	2,068,300

In fourteen years the advance in consumption of Southern mills was from 401,452 bales to 1,597,112 bales, or 297 per cent. while that at Northern mills was from 1,710,080 bales to 2,068,300 bales, or 20 per cent. A striking feature of the advance at the South is the fact that every year had shown an increase except 1894, when there was a decline of about 25,000 bales, which was more than compensated for in the advance of 140,000 bales the next year. While it required from 1890 to 1897, or seven years, for Southern consumption to increase from the half million to the million bale mark, the increase from the million bale mark to a million and a half bales took only three years. On the other hand, the consumption of Northern mills has fluctuated, showing declines in 1889, 1893, 1894, 1896, 1899; the tak-

ings in 1900 being but 40,000 bales more than those of 1891, ten years before.

In this fourteen-year period the South's consumption of cotton expanded from less than 20 per cent. to more than 40 per cent. of the total used in the country; yet that total, amounting during the past season to 3,665,412 bales, represented only about 38 per cent. of the crop of cotton raised in this country. That fact leads to the main point, viz.: the outlook for American cotton manufacturing from the Southern standpoint.

In some quarters alarm has been expressed at the inroads upon the industry in this country made by the South and the more rapid progress made in that section than in New England, as indicated by the steady increase of consumption of cotton in Southern mills, the building of new mills, and the enlargement of older ones. Side by side with these expressions have been suggestions that capital was making a mistake in investing in Southern mills, that New England mills should change their financial methods and their organization, or should equip themselves throughout with the latest machinery if they hope to hold their own; that they should improve upon their products, going still further into the manufacture of still finer grades, or that in the culture of flax and the manufacture of linen the North should find compensation for possible loss of prestige as a cotton manufacturer. Meanwhile, one distinct advantage of the South, but by no means a preponderating one, its supply of mill labor, has been the subject of agitation in a spirit, on its surface, unfriendly to the South and, judging from experience elsewhere, unfortunate for the mill worker and the mill owner. That the mill owner of New England, rather than the mill worker there, has taken the lead in this agitation, which has even gone to the extent of an attempt to secure an amendment to the national constitution, permitting Congress to interfere with the relations of employer and employee in any part of the country, seems to point in any other direction than that promotive of the policy which must prevail if American cotton manu-

facturers are to reap the rewards which will be theirs if there be no interference with natural laws.

If the sale of the products of American mills were to be confined to the United States, there might be reason for alarm in the older sections at the onward march of the Southern mills, for it is certain that they are to dominate in the manufacture of the coarser grades, and there is no reason to believe that they will not have a constantly increasing share in the trade for finer goods. This fact is appreciated by many of your own long-headed mill men.

In a paper which I had the honor to present before this Association in 1895 I said: "Personally, I am firmly persuaded that New England will find it profitable to take an active part in the development of the South's cotton mill interests, and thus reap some of the profits. This section offers to New England the same opportunity which the world has offered to Great Britain—a field for the employment of its surplus capital and energy to the profit of all parties interested." Since then a good many millions made in manufacturing cotton at the North have been invested in Southern cotton mills, New England concerns in some instances having bodily extended their own operations to the South; such, for instance, as the Dwight Company at Alabama City, Alabama, the Massachusetts Mills at Lindale, Ga., the New York Mills at Aragon, Ga., and the Merrimac Manufacturing Company at Huntsville, Ala.

These excellent straws are indicative of the New England spirit which, like that of Old England, claims the world for its field and is ever ready to face every danger, which is shrewd enough and bold enough to meet a threatened competition more than half way and to domicile itself as a participant in the profits of that competition. It is the same spirit as that which led SAMUEL SLATER to venture from Old England to New England, getting closer to the supply of raw material; which gave FRANCIS CABOT LOWELL the impetus to develop mill organization and to make improvements in textile machinery, and which was the inspiration of GEORGE DRAPER, of Hopedale, learning as a youth by actual

work in the cotton mill the details of repairing and installing machinery, to become an inventor and manufacturer of steadily-improving machinery, until his firm is now one of the greatest makers of machinery in the world. These men are but types of the thousands and tens of thousands who, in a section with comparatively few natural advantages, have created the marvellous industrial life, the wealth, the civilization of New England. "Their works do follow them."

The same unconquerable spirit — the spirit which has made America what it is — is seen in such Southern mill centers as Charlotte, Spartanburg, Augusta, Columbus, Greenville, and many other Southern mill towns. The South is able to add to native ability and business instincts the knowledge and experience gained often at very great cost by the ablest men of other sections. At the same time it is able to embody in buildings the latest designs, to equip them with the most approved machinery, to operate them by direct water power, by electric power or by steam, as may be preferred. It is certain that no mill in the North may be run by coal brought to the surface in digging for the foundations of the mill as was done in Albama, and in available water powers safe from ice and from floods the South has enough and to spare.

In spite of mistakes here and there, which have been very few, all things considered, the cotton mill policy of the South has been characterized by eminent conservatism financially and by thorough progressiveness mechanically. There is no need to rely for this statement upon competent Southern critics alone. One of your leading New Englanders, Hon. WILLIAM C. LOVERING, of Massachusetts, who has given close study to our Southern mills, took occasion in the course of a debate in the House of Representatives in 1897 to back up a brilliant statement by Representative MCLAURIN of South Carolina with these words: "I want to tell the gentleman from South Carolina something that he probably does not know. There are situated in his State some of the very best mills in the world. If I were asked today where in all our country was to be found the best

planned, best ordered and best equipped mill running in low numbers—aye, and the best profit—of any mill in America, I would point to South Carolina."

These remarks of a textile specialist may be applied to mills in other Southern States, and there is no reason to believe that they will not be with equal truth applicable to Southern mills hereafter to be equipped for making some of the finest goods. The competition of mills equipped with antiquated machinery with those using the latest inventions can have but one conclusion,—decadence of the lagging mill, no matter where the mills may be situated. The conclusion will be hastened when the up-to-date mill has the benefit of contiguity to the raw cotton and to fuel and location in a climate where the operatives may live comfortably and cheaply, and close to ports which, in the natural course of events, will be most convenient for the shipment of the products of American mills to the cotton markets of the world.

Southerners believe (and they have excellent foundation for their faith) that this location is in the South. Yet, they have not the least idea that the progress of the South will mean the ruin of New England or Pennsylvania. Badly equipped mills, wherever located, must go; but the Southern man believes that there is room enough for all modern mills. He knows that, though the South produces three-fourths of the world's cotton crop, our whole country has only between 18,000,000 and 20,000,000 of the total of 105,000,000 spindles in the world; he knows that the consumption of cotton goods measures the advance of civilization, and that the 10,000,000 bale crop of today must soon give way to the 20,000,000, and then to the 30,000,000 bale crop. He knows that, however rapid may be South's increase in cotton consumption, it must be many years before its own mills can spin its present 10,000,000 bale crop, and that by that time the world will be demanding of the cotton-growers of this section 20,000,000 or 30,000,000 bales.

This view does not imply that the South regards New England's textile future as uncertain. The South has seen New England

overcome its natural disadvantages, it has seen manufactures more than take the place of whale fisheries waning in the face of the discovery of petroleum; it has seen farms deserted for the mills, or for richer soil in other parts of the country, becoming fields for dairying and for the raising of poultry and other products demanded by an increasing population of manufacturing cities and towns; it has seen the growth of immense factories turning out textile machinery, or working the metals to be used in that machinery, despite the drift of the iron-producing energies to Pennsylvania on the way South; and it is confident that whatever may happen within the next twenty-five years in the textile field, whatever may be its own achievements there, New England will hold its own. It knows, too, that in a union or co-operation of all the textile interests of the country there will be a steady betterment all along the line in spite of temporary set-backs.

The limits of further improvement in the textile industry in this country have not yet been determined. Inventive skill has not yet reached its climax. Until it does we need have little fear for the future of our great American industry, provided we leave nothing undone which may legitimately place us in control of the great markets South and West of us — markets populated by two-thirds of the inhabitants of the globe, the majority of whom will need cotton goods in amounts increasing by geometrical progression, and provided we strengthen the abilities of our own textile manufacturing population.

New England set itself to that task many years ago. As far back as 1640 Massachusetts took steps to begin instruction of the children in spinning, and eighty years later Boston was busy with plans for its spinning school, foreshadowing the Lowell Textile School, the Philadelphia Textile School and the textile departments of Clemson College, S. C., the Georgia Institute of Technology at Atlanta, the North Carolina College of Agriculture and Mechanic Arts at Raleigh and of the Mississippi Agricultural College at Starkville. In the regular procession from the country mill to the town mill and from the highlands of the

Piedmont section to the country town is seen a wholesale training in cotton manufacturing of a population similar in sturdiness of character, alertness and adaptability to industrial evolution, to the population that once flocked to New England mills and laid the foundations of immense fortunes before they found substitutes in the French-Canadian and other foreign operatives. More than one of the influences which made necessary and easy the substitution of foreign for native labor in New England mills is lacking in the South. It will be many a day before the mills in that section will have to look elsewhere for operatives, and the history of the last fifteen or twenty years is a promise that with the increased practical interest in textile training of the school manifested in many parts of the South its operatives may be expected to meet any exigencies that may arise and to remain the backbone of American cotton manufacturing.

Their products, however, must have an outlet. The equipment of American mills is sufficient to supply American markets with cotton goods. Yet, no one believes for a moment that the building or equipment of American mills has come to an end.

As just said, the United States produces 75 per cent. of the cotton of the world, but its 18,000,000 spindles, or 17 per cent. of the total number in the world, consumed but 30 per cent. of the total raw material used in the world. During the same time the United States exported 352,194,989 yards of cotton cloth, and imported 65,044,490 yards of cotton cloth, of which 52,680,617 came from Great Britain, 5,264,113 from France, 3,731,279 from Germany, and 3,024,627 from Switzerland. Japan even sent 85,470 yards. At the same time, of other manufactures of cotton Great Britain sent $10,323,695 worth, France $4,590,384, Germany $8,536,257, and Switzerland $8,640,866. The total value of the imports of cotton goods was $41,299,836, or $17,319,835 more than the total value of cotton goods exported from the United States. While such a discrepancy exists, and while it is possible for America to increase its cotton production to even 100,000,000 bales, and while American enterprise continues to refuse to recognize a confirmed superiority in any line of indus-

try by any other country, there is no reason for us to be other than optimistic as to our textile future.

We must make that future, and we alone. We can not make it merely by pointing to our achievements. They are valuable only as a revelation of our potentialities. We can not make it by indulging in snarls at one another. A house divided against itself can not but fall. We can make it only by a persistent, united effort to meet our competitors upon their own ground and with their own weapons, if not with improved ones, in the hands of a better trained industrial army.

It is no easy task, the one before us. We must bear in mind that England, having the start of a few years of America as a manufacturer of cotton with machinery, sends from her 46,000,000 spindles between 5,000,000,000 and 6,000,000,000 yards of cotton goods to every quarter of the globe, India taking the largest amount, closely followed by Turkey, China, Brazil, the Argentine Republic and Australasia. We must keep an eye upon Mexico as a cotton manufacturer and a cotton grower. We must not forget that Japan has 85 cotton mills, the largest of which, with 5,000 employes, uses 75,000 spindles. Without losing sight for a moment of the opportunities in China which took last year more than 50 per cent. of our exports of cotton goods, we must seek to extend those exports to Mexico, Central America and South America, which last season took the comparatively small quantity of less than 60,000,000 yards.

We have advanced in recent years wonderfully well, but these figures show that we have by no means encroached upon our possibilities. International events since 1898 have opened the way for the overcoming of many of the difficulties which we have hitherto been obliged to meet, and have placed the United States in a position to command a greater trade. We must avail ourselves of the opportunity, first by improving our trade connections by individual effort, or by co-operation; and, second, by inducing such legislation as may provide promptly, and at the lowest ultimate cost, rapid communication with our

new possessions in the Pacific and Atlantic, with the Latin Americas and with the peoples of the Southern Pacific.

It is hardly necessary for me to tell you where the South stands toward such a programme. It stands today just where it stood fifty years ago, before political agitation turned its attention from industrial aims to the contest of 1861-65. Nearly a year ago leading cotton manufacturers of South Carolina united in a demand that the powers of this government should be exerted to maintain equal opportunities for trade of all nations in the Great Empire of 450,000,000 inhabitants, now racked by internal confusion, knowing full well that in a free-for-all contest the textile trade of this country, based upon the advantages of the South, would in the end hold no second place. Six months later the Southern Cotton Spinners' Association in its meeting at Charlotte, N. C., took up the work of the ante-bellum South so rudely interrupted forty years ago, and went on record as favoring the construction of the Nicaraguan Canal, giving a quick and cheap route to the Pacific coast and the Orient; the appointment under national auspices of a commercial commission to visit the East for the purpose of studying the requirements to be met there by our exporting manufacturers, and the passage of a bill intended to encourage our shipbuilding interests. These acts express the general attitude of Southern textile manufacturers toward the great problem before this country. They mean that the South, in a broad national spirit, is working for the interests of all in the knowledge that thereby it will have its own due reward. This New England Cotton Manufacturers' Association cannot fail to have been impressed at Atlanta, at Philadelphia, at Boston, at Montreal and elsewhere by this characteristic of the South, this determination to make the most of its opportunities with no thought of injury to individuals or classes of other sections. It has the right to expect the same treatment at the hands of others.

It is well for all of us to remember that the invention of the saw-gin in Georgia in 1794 by ELI WHITNEY, the New Englander, increasing the demand for an enormously wider cultiva-

vation of cotton, fastened firmly for 70 years upon the South the curse of slavery, against which leading men of the middle section of the country had set their face, and made possible the great fortunes of New England manufacturers; that the removal of the curse of slavery from the South, while destroying serious obstacles in the way of Southern whites who were qualified to engage in mechanical industry, placed upon the South, through its unfortunate sequel of misapprehension and misunderstanding another burden hardly equalled by the expense and anxiety of slavery and the fearful destruction of war; that the burden affects the social and industrial health of the whole country, and that 25 years of experiment have proved the futility of attempts to lighen it from the outside. The South asks that it be permitted to solve the weighty problem from the vantage ground of two centuries' experience and of close acquaintance with its many phases. The South feels, too, that the effects of outside interference with one form of its labor ought to be sufficient to call a halt upon further attempts upon other forms. If Southern cotton manufacturers have any grievance at all against their New England brethren, it is not against them as a class, but against those individuals who, feeling a temporary depression, wrongly attribute it to Southern prosperity and show an inclination at times to undermine what they believe to be the one great Southern advantage. Such a spirit will be a block in the path of harmonious effort by American cotton manufacturers to advance the interests of their industry. Neither textile portion of the country can afford to waste time either in throwing stones at the other or defending itself from home made missiles.

No better time than the present could be had for an agreement to suspend indefinitely such skirmishes, which can have the effect only of needless, if not wasteful, irritation. No better place could be selected for the recording of such an agreement than Washington City. As part of the several compromises thought necessary in the formation of this government — compromises which were destined to give New England decided commercial advantages, and to check any tendency of the South

toward industrial life — the capital of the United States was placed on the Potomac, midway between Massachusetts and South Carolina. On this common ground, an inheritance of concessions thought necessary to insure the stability of the Union, Northern and Southern cotton manufacturers may properly join hands and hearts and minds for the great task of insuring the stability and expansion of their mighty industry.

Our iron and steel makers now lead the world in their output; they are the dominating factors in the world's iron and steel trade, and it can almost be said that no great iron bridge is built and no railroad laid anywhere on the face of the earth but what America sets the price. We have conquered the world in iron and steel, though our advantages for that industry as compared with the advantages of other countries are not so great as are our advantages for supremacy in cotton manufacturing. What they have done may well be an inspiration to our textile leaders. The world is our market, and, unless our cotton manufacturers go in and possess it, they will be forced to admit that they are not equal in daring genius and broad leadership to the giants who have made America the supreme power in the world's iron and steel interests.

The South proposes to do its share. Though it has scarcely laid the foundation for its work, it broadly enters the field for its share in the world's trade. The South has watched with wonder, with admiration, perhaps some time with envy, the virility and the energy which have enabled New England's people on the artificial foundation of imported cotton, imported coal, imported pig iron and imported foodstuffs to rear such a marvellous structure of industry, to create such vast wealth, and with its wealth to build such magnificent churches and endow such splendid seats of learning; and, while giving all honor to the men who have done this, it bids them enter a friendly rivalry where there is room enough for all for the broadest possible expansion of America's textile interests — a rivalry which should be free from all sectional bitterness and in which it should be remembered that, as our country practically holds

a monopoly of the world's cotton crop, it should never be content until it holds to the same extent a monopoly of the world's cotton goods production.

The PRESIDENT. It is evident that you have all listened with much pleasure, and I feel assured that you will derive substantial benefit from the paper just presented. Mr. EDMONDS, editor of the *Manufacturers' Record* of Baltimore, is widely known among the cotton textile interests of the country, but especially throughout the South.

The *Record*, under his able management, as also his personality, have long since become a recognized power in the advancement of Southern industrial interests embracing large areas and widely diversified products.

The question which he presents to us is one of very great interest to Northern manufacturers, not alone for the grave fear and doubt that exists in the minds of many respecting the future of both sections in their relation to this important industry, but also because of the influence which this uplifting of the South is to exert in other fields which, perchance, have not received such careful consideration as the question deserves. I think it is a question worthy of the most serious study on the part of both Northern and Southern manufacturers and if thus pursued, both sides will discover much which may tend to greatly modify extreme views, as also that which may indicate a solution of the problem of present differences upon perfectly natural lines. I have for many years been impressed with a judgment touching this question, which as yet I have seen no occasion to more than very slightly modify. Predictions of nearly twenty-five years ago have since been fulfilled. The process is a perfectly natural one. The evolution from former into present and

toward future conditions is progressing steadily and the final solution is within sight. The people of the South are rapidly rising into higher spheres. It is a matter of common interest that they shall be raised to the higher planes of intelligence, education and labor conditions in respect to service and compensation therefor at the earliest possible time. That which we observe in the cotton textile industries constitutes an important but yet only a fractional part of the forces which are now in operation. The wise and proper view of this question embraces a wide field of action. It is, in common with all other important interests, one which demands our earnest consideration. I trust that it may receive this at your hands.

I have had the pleasure of many years of personal acquaintance with Mr. EDMONDS, and I am pleased upon this occasion to be in a position to extend to him my hearty congratulations.

I will now proceed in the order of our work. The next paper will be, The Possibility of Cotton Manufacturing in the United States, and Especially in the South, by Mr. R. M. MILLER, Jr., of Charlotte, N. C. [Applause.]

THE POSSIBILITY OF COTTON MANUFACTURING IN THE UNITED STATES AND ESPECIALLY IN THE SOUTH.

R. M. MILLER, JR., Charlotte, N. C.

Should it be attempted to go into all of the details of the possibility of cotton manufacturing in the United States and especially in the South, it would require quite a lengthy paper and also doubtless tax your good patience, hence, to come within the limit of the request to read a short paper at this meeting, the subject will be viewed only from a general and comprehensive standpoint.

History tells us that it is beautiful to trace the lineage of some one whom we call great, but it is equally beautiful, if not more interesting, to trace the progress of some great movement, religious, financial, political, or industrial, upon the success of which may depend the destiny of a nation's prosperity and supremacy.

The great industrial movement, in the line of cotton manufacturing, which has swept over the East and especially over the South, within the past decade, has been unparalleled in the past history of the industry.

Antedating the Civil War, the slave owner of the South found better returns financially, in producing and marketing the raw material, giving but little attention to manufacturing, while the East, having the capital, skill, and experience, made greater progress and financial success in the converting of the raw material into yarn and cloth.

Taking 1860, therefore, as a basis, when the entire industry was practically in its infancy, we note with a feeling of pride and

self-satisfaction the wonderful progress made and the culmination of which is not yet in sight.

In 1860 we had in the United States in active operation,	5,235,727 Spindles
Consuming about	850,000 Bales
Of cotton, with a capital of	$98,500,000.
Of the above, New England operated	*4,000,000 Spindles.
Consuming about	600,000 Bales
Of cotton and with a capital of	$70,000,000.
The South operated	300,000 Spindles
Consuming about	90,000 Bales
Of cotton and with a capital of	$9,750,000.
The Middle States, at this time, operated about	935,000 Spindles.
In percentage of spindles, therefore, New England operated	76%
The South	6%
The Middle States	18%

The total consumption of raw material was 21 % of the American crop of 1860–1861.

In 1900, we have in the United States in active operation	21,250,000 Spindles
Consuming about	4,000,000 Bales
Of cotton and with a capital of	$500,000,000.
Of the above, New England is operating	13,500,000 Spindles
Consuming about	2,000,000 Bales
Of cotton and with a capital of	$275,000,000.
The South is operating	6,000,000 Spindles
Consuming about	1,750,000 Bales
Of cotton and with a capital of	$120,000,000.
At the present time, therefore, in percentage, New Englandis operating	63%
The South	29%
The Middle States	8%

The total consumption of raw material being 42 % of the American crop of 1899–1900.

The phenomenal period of growth, however, during this time dates from 1890.

* All figures are given in round numbers.

New England was then operating	10,850,000 Spindles.
The South,	1,550,000 "
And all others,	1,700,000 "
Today, as has been shown, New England has	13,500,000 "

An increase in ten years of 25 %.

Today the South has 6,000,000 Spindles,

An increase of 309 %, with practically no increase in the Middle States.

In percentage, therefore, the South is today operating 29% of the Spindles of the United States and 44½ % of Those operated by New England.

Continuing the same ratio of increase for the succeeding decade, we would have the following interesting figures for 1910:

New England,	16,875,000 Spindles.
The South,	24,000,000 "
And all others,	1,700,000 "
A total of	42,575,000 Spindles.

With the same ratio of increase in consumption, we would then consume 8,000,000 to 8,500,000 bales of cotton, or 87½ per cent. of the total American crop of 1899–1900. Allowing 12½ per cent. of the crop as reserved stock to be held by the mills, the United States would consume and control her entire production.

With this condition of things would come two-fold benefits: First, the ability to dictate the price of the raw material; second, the absolute control of the cotton goods trade of the world.

This condition, in my judgment, is the end for which we should strive, and the combined efforts of New England with her skill and experience and the South with her pluck and perseverance can accomplish these results and finally reach the goal of our greatest expectations.

The pessimist, however, would predict the direst disaster in the future for the mills of New England, while the optimist would paint in rosy hue the ultimate absorption, by the South, of the entire industry.

Notwithstanding the harpings of the pessimist or the halluci-

nations of the optimist, cotton will always be manufactured and successfully, in New England, and, I take it, that our country is large enough and there is room enough for all — New England and the South — to share equally and alike in the wonderful opportunities for cotton mill development awaiting us in the near future.

Having seen from the above the possible results to be derived from unity of action and combination of interests between the East and the South, let us examine, more especially, into the conditions prevailing, at the present time, in the Southern States.

The world is operating about 100,000,000 spindles, consuming about 14,000,000 bales of cotton, of which the South furnishes 75 per cent. of this raw material, while she operates only 6 per cent of the spindles. This condition is antagonistic to the natural order of things and the South is rapidly awakening to her responsibilities.

As has already been noted, the South increased her spindles by 300 per cent. in ten years, which is a phenomenal growth, and yet it is only natural. The possible and prospective millions of spindles to be added within the next few decades, will challenge the wonder and admiration of the industrial world, and yet it is only natural. The home of the raw material is naturally the home of the manufactured product and the home of the cotton mill is naturally hard by the cotton field of the South.

It was once said that "The sheetings and print cloths of the South were consumed in Northern homes and Southern yarns were woven on Pennsylvania looms and made into hosiery on New York knitting frames." That era has passed and the North must guard well her laurels or soon these anomalies will be reversed.

Some enthusiasts will tell you that there is no limit to the production and manufacture of cotton in the South.

The argument, apparently plausible, is, however, deceptive and will not admit of close scrutiny, except conditionally. In this matter the future is fraught with a great deal of danger.

I contend that in proportion as we increase our manufacturing

capacity, in nearly the same proportion we decrease our ability to produce the raw material.

The cotton mill operative of the South is the native born white labor, as is also the successful producer of the raw material, hence it necessarily follows that in proportion as we draw this labor from the field to the factory, we decrease the farm labor. This being granted the possibility of the cotton crop is limited.

The reverse proposition is equally true, that in proportion as we increase the yield of cotton we decrease the available mill labor and thereby decrease our capacity to manufacture.

There is, at present, a growing feeling in the South that the increased production of cotton is now dependent very materially upon the colored laborer, and the demand of the manufacturer upon the white labor would seem to justify this view of the matter.

By origin and environment the negro is fitted to live under the fiercest heat and to thrive in the damp and unhealthy lowlands of the South; by nature and training his wants are satisfied by the plainest necessities of life; good-natured, happy, contented apparently with his lot, he is in truth the ideal laborer for the cotton field.

As such, however, he is unfortunately rapidly degenerating, growing shiftless, worthless, indolent and slovenly. He is abandoning the farm for the red lights and glare of the town and city; congregating in idleness and laziness on the street corners, refusing honest work when it is offered, daily becoming a fit candidate for the "rock pile". What then is the remedy for this condition of the colored farm labor?

To my mind the solution of the problem presents itself in the form of a dilemma — either he must work or give place to a good, healthy and industrious immigration, which will labor in unity and harmony with the white farm labor and land owner of the South. I am disposed to make bold the prediction that the next quarter of a century will see a material change and improvement on this line; that the race will either become more

industrious and intelligent, of which they are capable, or continuing in their laziness and idleness, the progressive spirit of the South will demand that they "seek other and more congenial climes".

The Southern white laborer is at work, alert, progressive, industrious, and they have no abiding place for any man without the hoe.

Viewed, however, from the standpoint of his entering into his work with zeal and fidelity, laboring for the best interest of himself and race, cultivating and improving waste lands now idle for the lack of his bone and sinew, there is a happy and peaceful home reserved for him in the South and with this spirit of fraternity and union of labor interests, then will the possibility of the production and manufacture of cotton become unlimited.

Quite a great deal also has been said and written recently about utilizing him as a cotton mill operative. Repeated effort and experiment have already been made in this particular, but thus far each has invariably proven unsuccessful and disastrous financially. His most unredeeming feature in this work is his unreliability. It seems impossible to eliminate this defective feature of his character, for to do so one must first eliminate the camp meeting, festival, excursion, blackberry field and watermelon patch, without all of which he is "a stranger in a strange land", but with which he is at home in his humble hut.

There are certain trades and vocations however, in which he is successful, but in speaking of him as a farm laborer and cotton mill operative, I do so in the generic sense and not as an individual, as we have in the South a number of intelligent, progressive and industrious colored people—deserving of all commendation and which is fully and gladly accorded to them by their white friends.

The settlement, solution and adjustment of this question of labor is the greatest problem confronting the industrial South today.

In addition to the two great fields—the production of cotton on the one side and the manufacture of cotton goods on the

other—the South is full of other possibilities. She is rich in yet undeveloped wealth, in lands, agriculture, timber, coal, grain, minerals, etc. Her valleys are rich and fertile; her mountains are rich with ores; her plains are rich with the ripening grain; her rivers are rich with undeveloped power. With an endless variety of diversified products; with a natural geographical position unsurpassed for the manufacture of cotton, with all of these things and with increased trading facilities, the possibilities which spread out before the South today seem unlimited.

She has the raw cotton at her mill doors, good transportation lines and easy access to the ports, economical power both steam and water, low cost of lands and material, low valuations and low tax rates, cheap fuel, low labor costs and long hours.

Her mills are of the latest designs and equipped with new and improved machinery, officered in the main by men of experience, intelligence and business sagacity, her labor is reliable and trustworthy; what tenable reasons, therefore, can be advanced against her continued growth and prosperity?

True, the labor agitator has recently appeared in some sections of the South as a disturbing element, coming not from any worthy desire to aid his fellow laborer, but instigated probably by some outside influence or from a purely mercenary motive to draw blood money from his helpless and possibly ignorant victims. The remedy for such invaders and disturbers of our labor is, twenty-four hours in which to leave the community, or to suffer the consequences of their delay.

Our trade conditions in the South are also expanding. Our larger mills are seeking an export outlet for their goods, which is practically unlimited in its demands. The great export nations of the world shipped last year cotton goods having a value of over $500,000,000 and out of this tremendous total one small section of Great Britain, with a population of 4,000,000, supplied 66 per cent. of this trade, while the United States with 75,000,000 people secured less than 5 per cent.

The possibility, therefore, of the over-production of cotton

goods in the United States under such conditions is a delusion, when we reflect upon our ability to secure, not 5 per cent. but 66 per cent., yes, 100 per cent. of the world's export trade in cotton goods.

"The South, too, is developing a broader spirit of industrialism which will open up a demand for her products in the Orient and South American countries. She is also taking her merited place in the open markets of the world, demanding no right for herself that she would not concede to others and with perfect confidence in her ability to grapple with the new conditions and to achieve and maintain her industrial and commercial supremacy."

Such are some of the conditions and possible results to be derived from a study of the subject, the scope and details of which are practically inexhaustible, the importance of which is far more vital to the interests of many cotton manufacturers today than they realize and the final settlement of which is yet in the unknown future.

Upon the proper solution of the problems will depend the continued growth of our industrial prosperity—if settled wisely, judiciously and amicably, we will then have forever established American supremacy in the cotton goods manufacturing world.

In conclusion, allow me to use the words of that distinguished Georgian, true then and truer now, who thirty-five years ago, with prophetic vision seemed to pierce the veil of the future of his beloved South, when in one of his magnificent bursts of eloquence he exclaimed: "There was a South of slavery and secession—that South is dead. There is a South of union and freedom—that South, thank God, is living, breathing, growing every hour."

THIRD SESSION.

WEDNESDAY EVENING, OCTOBER 17, 1900.

The Association met in the banquet hall of the Arlington Hotel at eight P. M., President THOMPSON in the chair.

The following paper was read:

THE IMPROVEMENT OF COTTON.

H. J. Webber, U. S. Department of Agriculture, Washington, D. C.

The Department of Agriculture in its work on cotton is not trying to improve the machinery used in cotton manufacture or give you a new gin that will gin cotton cheaper or better. We are, however, as explained by the honorable Secretary of Agriculture, trying to produce for you better varieties than those now grown.

One of the principal methods used in the improvement of any plant is that of selection, which consists simply in taking seed for propagation from superior plants, selected because of their possessing in marked degree some important and valuable character, such as great yield, particularly fine or long staple, etc. Sea Island cotton, which is grown extensively on certain islands off South Carolina and Georgia, has been greatly improved by the very careful selection to which it has for years been subjected (Figure 1), until now it is recognized as the finest cotton produced anywhere in the world, the best grades selling at from 50 to 60 cents per pound. The method of selection which has been devised here and is in general use, is the most thorough and painstaking which the writer has ever seen used with any agricultural crop. Under this careful selection the standard of excellence of the staple has gradually increased, and this careful selection has become more and more necessary to keep the staple up to standard, until now one may truthfully say that the success of the industry has come to depend entirely upon the skill of the individual planter in selection. One of the illustrative cases which we will pass through the audience contains

samples of ordinary unselected Sea Island fibre in comparison with that of one of the finest selected strains (compare Figure 1). The selected strain is not only superior in length of staple, but in strength, silkiness, general quality, etc.

The factor of seed selection in cotton growing is of the greatest importance and yet I think it is safe to say that over 75 per cent. of the growers of upland cotton, and indeed many Sea Island cotton growers, pay no attention to it, simply taking their seed from the pile at a public gin, for instance, without any reference to the variety, vigor, productiveness, etc. It is entirely a matter of chance as to whether they get poor and worthless seed or seed of fair quality. Superior seed of any strain could never be obtained in this way other than as a rare accident. Where a factor of this kind is such an important one in the production of a paying crop, no grower can afford to leave it to chance. Growers should thus be instructed in the methods of selection and urged to give the matter careful attention, so that the strain grown may be increased in yielding capacity and the lint improved in quality.

In the improvement of cotton by selection, as the honorable secretary has explained to you, we do not aim solely to increase the length and quantity of the fiber, but many other important factors are taken into account. Resistance to disease is one important factor and it is in this direction, probably, that we may hope to obtain our most far-reaching and important results.

It has long been known that in many cultivated plants certain varieties are more resistant to disease than others. As an illustration we have varieties of oranges resistant to foot rot; grapes resistant to black rot and Phylloxera; wheats resistant to rusts, etc. Even with this knowledge, however, the intentional systematic breeding of resistant strains has only just begun and can only in the past few years be said to have taken shape as a definite method of controlling plant diseases.

For the last two years the department has had under investigation a disease of cotton known as "wilt", which has become very serious in certain sections where Sea Island cotton is

grown. The malady is caused by a parasitic fungus (*Neocosmospora vasinfecta*) which enters the small roots and grows up into the main stem, blackening the tissue and causing the leaves to wilt. The plants attacked are killed or stunted so that an entire crop may be a total loss, almost every plant succumbing to the disease.

This fungus unfortunately is not limiting itself to the Sea Islands and Sea Island cotton but is spreading in certain upland sections and bids fair to spread all over the cotton belt of the country and will certainly cause great destruction and loss unless a way of checking it is found. [Photographs were exhibited showing the great destruction caused in certain plantations of Sea Island and upland cotton.] The Division of Vegetable Physiology and Pathology of the Department has been conducting investigations of the disease and Mr. W. A. ORTON, who has had this phase of the work in charge, has grown experimental plats of a number of different cotton varieties on badly infected soil at Dillon, S. C. In the course of these experiments Mr. ORTON has found that certain varieties of cotton are almost wholly immune to the disease, not being seriously affected by it. The varieties of Egyptian cotton tested were all found to be resistant to a remarkable extent, the Jannovitch and Mit-Afifi, two of the best Egyptian sorts, being among the number tested. It was also found that the Jackson Limbless was much more resistant than other varieties of upland cottons, showing a remarkable difference in plats grown side by side. [Photographs were exhibited illustrating the comparative effect of the malady on immune and susceptible races.]

It early occurred to us that one of the best ways of combatting the disease was to select resistant strains, particularly of the fine Sea Island sorts, where no other kinds of the same quality could be obtained to take their places. In badly diseased fields where almost every plant is killed, frequently a plant here and there can be observed which stands up exceedingly vigorous. It was questionable whether these plants accidentally escaped infection or were actually immune. By carefully studying such plants,

however, Mr. ORTON found that they had been infected with the disease in many places, possibly hundreds of times, but were actually resistant and had grown on and overcome or thrown off the disease. Here then in these resistant plants we have the starting point for the production of resistant strains. By selecting seed for reproduction from these resistant plants we can doubtless in a few years breed up numerous strains sufficiently resistant to the disease to be practical for general culture. One test of the kind has already been made by Mr. ELIAS L. RIVERS* of James Island, S. C., a planter who has been co-operating with the Department in work on this disease. Mr. RIVERS last year collected seed from several resistant plants in a badly diseased field of Sea Island cotton and this year the seed was planted in a single row through a badly infested field, with ordinary Sea Island on each side. The row of cotton grown from this seed proved to be remarkably resistant, hardly a single plant showing any marked injury from the disease, while almost every plant of the ordinary Sea Island in adjoining rows were killed. [A photograph was exhibited showing this remarkable effect.] It should be remembered that this is the result of simply one year's selection, and a selection in which the immunity of the male parent was not considered. If, coupled with this selection of seed from resistant plants, the work had been started earlier in the season and flowers of resistant mother plants had been hand crossed with pollen from similar resistant plants, it is probable that a still greater and more lasting effect would have been obtained. This year the work is being done in a more careful, systematic way, and we are encouraged to believe that the disease may be entirely controlled in this manner.

Another line of cotton improvement work which is being investigated by the Department is the production of new and different varieties from those now existing. We are not satisfied to simply improve the strains that already exit, but desire to produce new ones. I am not certain whether it will meet your

---

* See paper on Sea Island Cotton by ELIAS RIVERS. Transactions New England Cotton Manufacturers' Association, Volume 59, page 244.

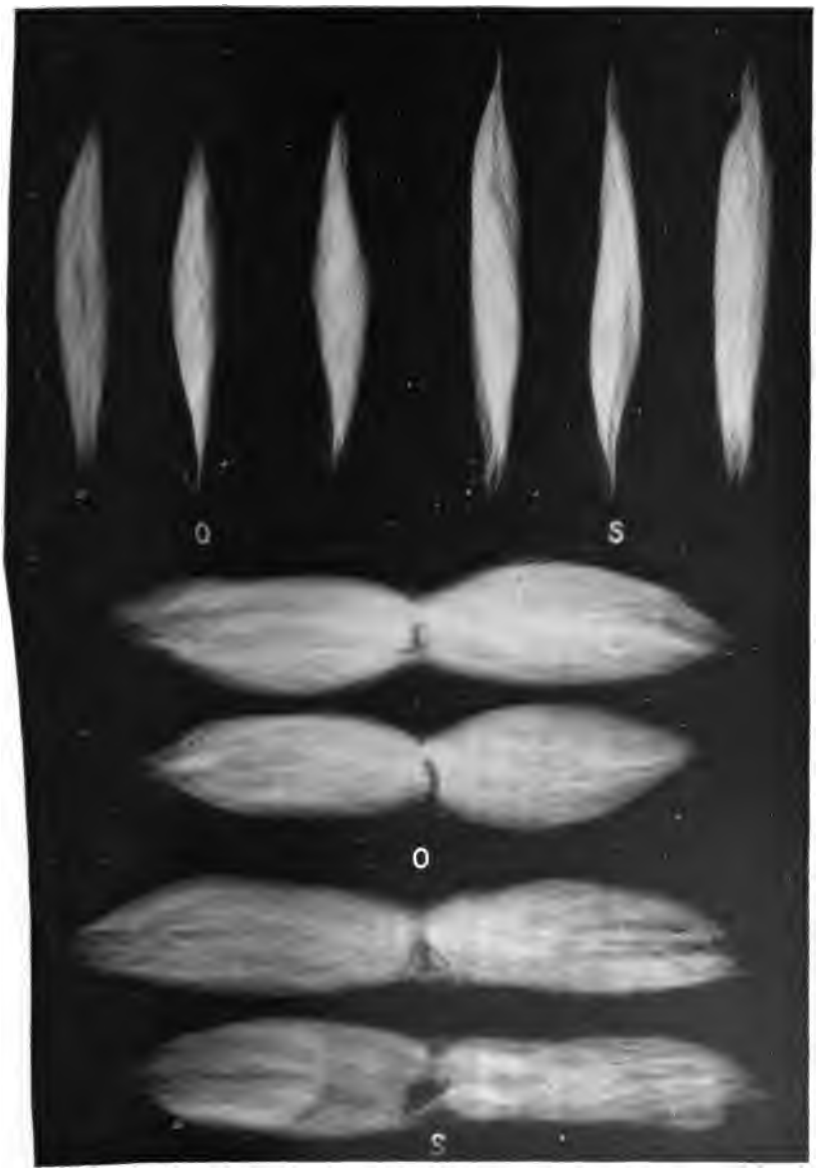

FIG. I.

Improvement of Sea Island Cotton by selection: O, O, Ordinary Sea Island Cotton — Original Type from which selection was made; S, S, Selected Sea Island Cotton, showing increased length of Fibre. (7-8 natural size.)

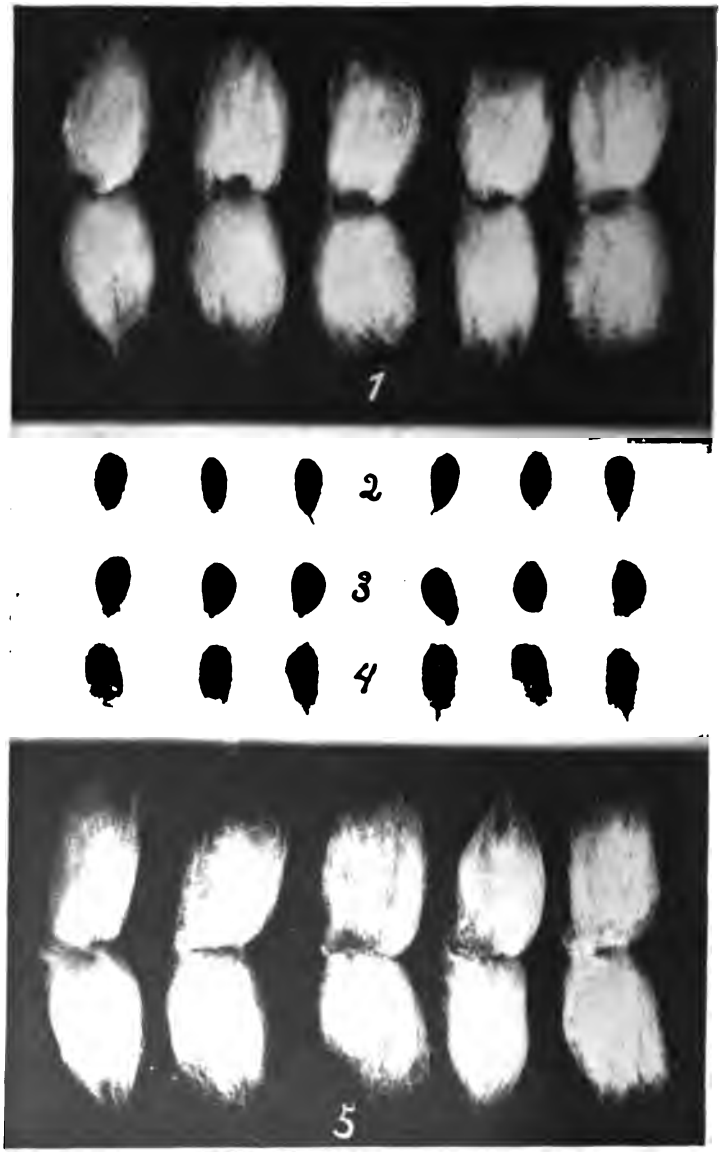

FIG. 2.

Seeds of Klondike, Sea Island, and Ordinary Upland Cotton: 1 and 2, Seeds of Klondike with and without lint; 3, Seeds of Sea Island Cotton 4 and 5, Tufted Seeds of Ordinary Upland Cotton (the variety from which the Klondike was developed), with and without lint. (13-16 natural size.)

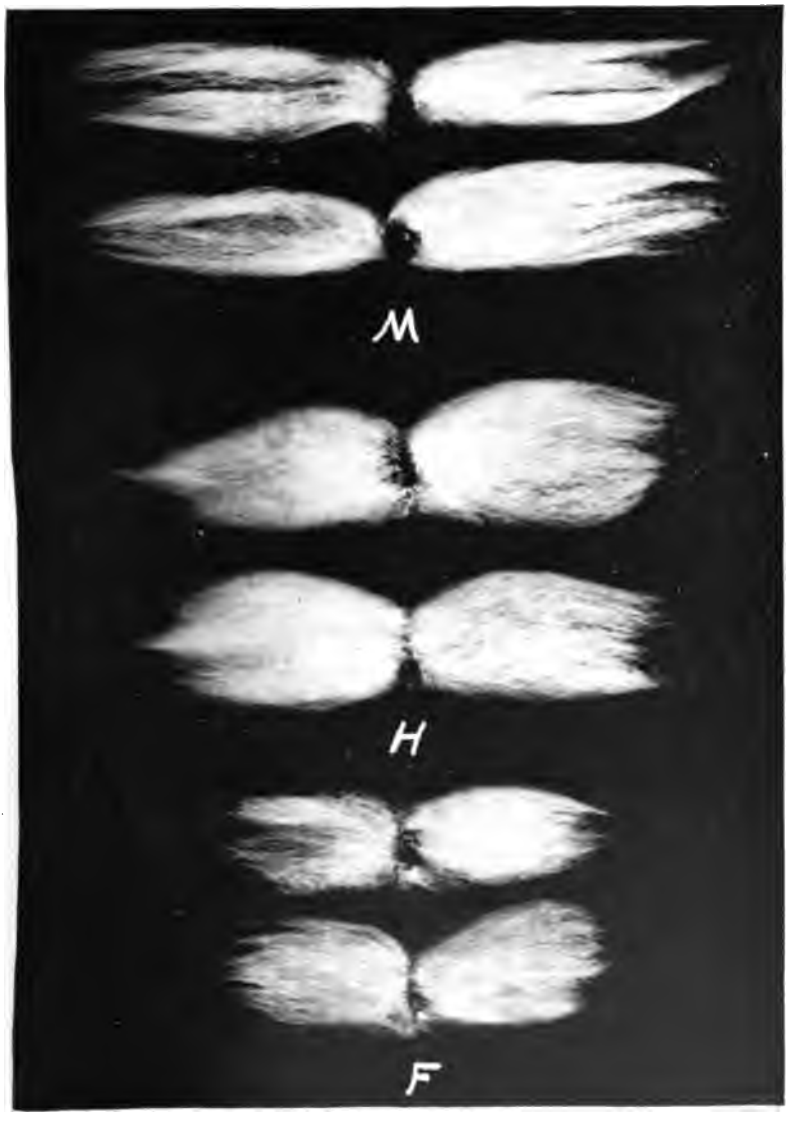

FIG. 3.

Seeds of hybrid cotton and its parents, with the fibre pulled out to show the relative lengths and amounts: M, Fibre of Sea Island Cotton, male parent; F, Fibre of Upland Cotton, female parent; H, Hybrid between them. (10-11 natural size.)

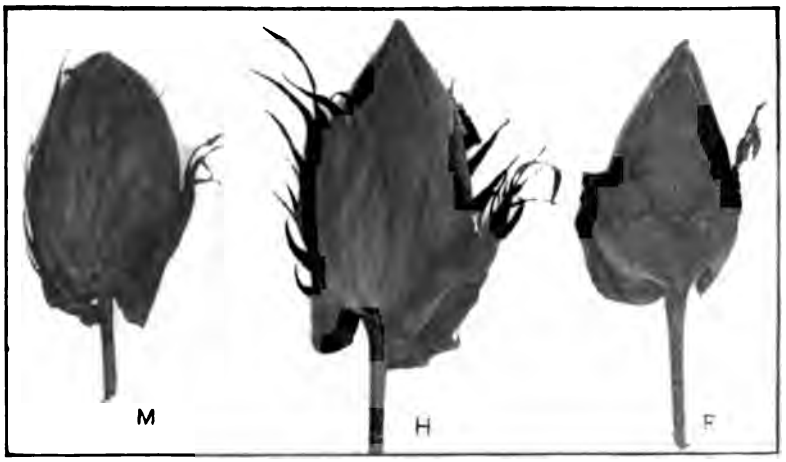

FIG. 4.

Bolls of Hybrid Cotton and its Parents: M, boll of Klondike (a variety of Upland Cotton), male parent; F, boll of Sea Island, female parent; H, boll of hybrid between them, showing increased size. (5-7 natural size.)

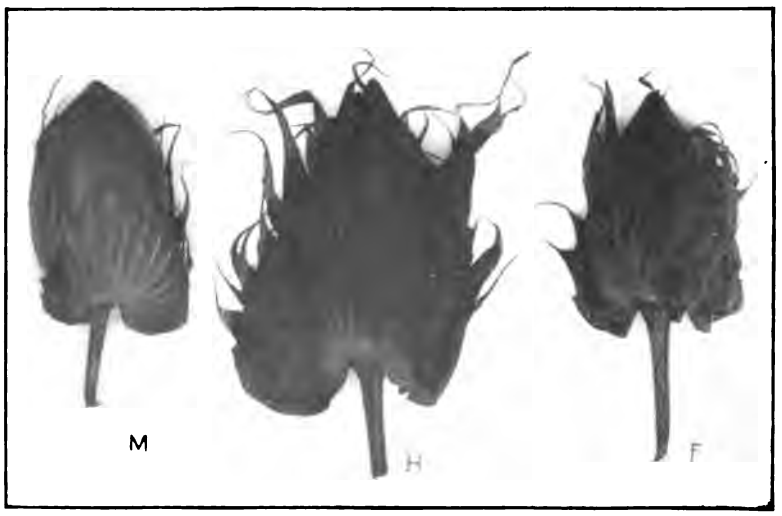

FIG. 5.

Bolls of Hybrid Cotton and of its Parents: M, boll of Klondike (a variety of Upland Cotton), male parent; F, boll of Ashmouni (a variety of Egyptian Cotton), female parent; H, boll of hybrid between them, showing increased size. (5-7 natural size.)

approval as manufacturers, but it seems to us that upland varieties producing a longer and better quality of staple would be very valuable and desirable. We hope to accomplish this by securing numerous hybrids of the best sorts of upland and Sea Island and then selecting from them the best individual plants. If the staple is to be increased in length to any great extent, it must be borne on a smooth black seed, like the Sea Island type, so that the fibre can be ginned on a roller gin. Mr. W. A. CLARK, of Columbia, S. C., who is co-operating with the Department of Agriculture in work of this kind, early realized the difficulties in the problem and took up the first necessary step — the production of a smooth-seeded strain of the upland cotton. This he secured after five or six generations of selection, in a race which he called the Klondike (Figure 2). This sort we have used many times in hybridization with Sea Island, etc.

In general the lint of the hybrids is about intermediate in length between the Sea Island and upland, and is of much better quality than the upland. Some of the hybrids are fairly productive, while others are nearly sterile. By a careful selection of seed from those which are of good quality and most productive, it would seem that we will certainly be able to produce an upland cotton that will give a longer staple than ordinary upland and yield abundantly in any upland cotton region. We already have several hybrids which, from tests this year, seem to be very promising. [Cases of samples of these hybrids were exhibited. Compare Figure 3.]

Another important feature of the hybrids is the large size of the bolls which in many cases are considerably larger than those of either parent (Figures 4 and 5). If this feature can be retained in a thoroughly fixed variety, it will be very important, as a large boll such as shown by the hybrids, which opens wide, is easy to pick and saves much time. When we consider the greater ease of picking and better staple produced by some of these hybrids it would seem that very great improvements may be obtained from them.

The Egyptian cottons also furnish an important field of ex-

periment in the line of breeding. The department, as explained by Mr. DEWEY this morning, has imported the best races of Egyptian cotton and is having them tested in various regions in the South. The quality of staple produced by these varieties in the United States is apparently as good as the imported staple, but the plants are usually unproductive and it will probably be necessary to improve the productiveness of the different races by selection before they will be satisfactory for growth here. We feel certain that sufficiently productive strains can be obtained by a comparatively few years of selection, and experiments in this direction are already under way. Some of the Egyption cotton is of a tawny brown color, a factor which is said to be of importance in the manufacture of some goods, and we find that these tawny varieties when grown in this country generally lose their color and become cream colored or white. In most cases, as for instance the Mit-Afifi or Ashmouni, occasionally a plant grown here will produce the normal tawny color. By selecting seed from these plants strains can doubtless be produced which will uniformly give the desired color.

If a deeper brown color is desired for any special purposes in manufacture, the Peruvian or Pieura cotton, which is very dark reddish-brown, can possibly be used in hybridization with our ordinary sorts to give the desired color. This, however, is a more hazardous line of experimentation and the results cannot be predicted.

In concluding these few remarks I desire to say that I should be very glad to have you ask any questions bearing on the subject in general, or criticise the features of improvement which we are trying to secure.

Mr. THOMAS H. SMITH. What is the name of this fungus that you speak of?

Mr. H. J. WEBBER. It is a Fusarium. It belongs to a new class of diseases that was discovered only a few years ago by Dr. E. F. SMITH of the Department. It enters the roots and penetrates up into the stem, causing a blackening of the wood of the stem.

Mr. THOMAS H. SMITH. Has it spread over the cotton district to any extent?

Mr. H. J. WEBBER. It has spread all over the Sea Island district, but in the upland district it occurs, so far as I know, only in Carolina and Georgia. It is not very general in upland regions. There are a few other diseases; one called the root-rot (Ozonium), occurs in Texas and Louisiana. We have not done any special work with this malady but probably resistant strains can be selected here as in the case of the wilt.

I notice two other photographs here that I did not pass around, showing the increased size of the bolls. You can see them from where you are sitting. This is the upland and this is the Sea Island, and here are the bolls of hybrids, and here are the bolls of another hybrid. You can very readily see the increased size of the bolls of the hybrid.

Mr. WILLIAM G. NICHOLS. Have you given any special attention to the matter of uniformity?

Mr. H. J. WEBBER. Yes, and we find that the hybrids vary greatly in uniformity. Frequently the fibres at the point of the seed will be short, while those at the apex of the seed are quite long. But this, of course, may be corrected by selection. And in all the selection practiced by the Sea Island growers, uniformity is one of the most important factors that is taken into consideration. They give the greatest attention to this, not only pronouncing on it themselves, but usually sending

the samples to an expert factor and getting his opinion in regard to the market value of the individual samples, so that great care is exercised in all factors of this nature.

Mr. BROADUS E. WILLINGHAM. Will you please tell us as to the coarseness of the fibre — is it coarse or fine?

Mr. H. J. WEBBER. The fibre is about intermediate between Sea Island and upland. It is very much finer than the upland and has the silkiness of the Sea Island. If you twist the fibres into a mat they are silky and have all the appearance of Sea Island. A similar type which has been put in the mills of South Carolina, can be detected, it is said, the moment it enters the manufacture, from the smoothness. I do not know why it is, because I am not familiar with the manufacturing side, but it is said that the machinery responds to it much better and that the difference is easily recognized. The fibre is also much stronger on an average than the fibre of the upland.

Mr. J. R. MONTGOMERY. In your experiments with the Egyptian cotton, do you preserve the color and the characteristics of the Egyptian fibre?

Mr. H. J. WEBBER. Well, so far as the hybrids are concerned, they do not; but the pure Egyptian, when brought over here and grown, do seem to preserve the quality and color of fibre to some extent. In one of the cases that is passed around you will see a sample of the imported fibre of Egyptian, which I take to be the variety Mit-Afifi, in comparison with the same variety which was imported into Texas five years ago and grown there for very nearly five years, and then grown by us in our experimental plats in South Carolina last year. So far as I can tell from examination of those samples, they seem to have the typical crinkly, curly appearance of the Egyptian cotton, also the tawny brown color. On the contrary, the Ashmouni variety when grown in this country usually loses that tawny character and becomes quite white.

Mr. WILLIAM G. NICHOLS. What is the cause of that tawny color?

Mr. H. J. WEBBER. It is evidently due to hybridization in the past history of the plant with a brown cotton. In Peru and other places, you know there are cottons which are perfectly brown; and we are now making tests in hybridizing the brown Peruvian cotton with the Sea Island and upland varieties in order to get this color. The color varies in Peruvian cottons all the way from a light brown to a deep brown; and it is supposed, I don't know how truthfully, that the color in this Egyptian cotton comes from a strain of one of the brown South American cottons infused into Sea Island.

Mr. THOMAS H. SMITH. It is not the mud from the Nile that causes it?

Mr. H. J. WEBBER. I don't understand you.

Mr. THOMAS H. SMITH. It is not the mud from the Nile that causes it?

Mr. H. J. WEBBER. Oh! Possibly it is due to the mud from the Nile. We will possibly have to produce that mud over here.

Mr. WILLIAM G. NICHOLS. Is the Canary cotton that is produced to a very limited extent in this country simply a strain, or is it some variety produced by hybridization?

Mr. H. J. WEBBER. I cannot tell in regard to that; I am not familiar with the variety. Is it grown under the name of Canary cotton generally?

Mr. WILLIAM G. NICHOLS. I think that is the name in the market. There is only a very small amount produced.

Mr. H. J. WEBBER. I could not inform you in regard to it; I am not familiar with the variety.

Mr. WILLIAM G. NICHOLS. I think it is a very strong strain.

Mr. H. J. WEBBER. One of the questions we desire very much to know in experimenting on cottons is in regard to the intensity of this color that you as manufacturers desire. Do you want a light brown color, do you prefer a white, do you want a dark brown, or do you want all colors?

Mr. WALTER E. PARKER. We want all of them.

Mr. H. J. WEBBER. Is it a decided advantage to have a deep brown color?

Mr. WALTER E. PARKER. It is in some instances.

Mr. H. J. WEBBER. Well, we can produce the dark brown color without question, because the Peruvian is a very dark brown, but it is coarse; it will have to be improved by infusing Sea Island and strains of that nature.

Mr. C. M. SEARS. How can the average farmer secure the seeds if this is such a slow process?

Mr. H. J. WEBBER. As soon as the hybrids have been tested so that we know they are stable varieties, there will be some means found of producing them so that they will be put in the hands of growers. But at the present time they have only been growing one or two years, and it requires from five to six years to perfect them. You see after getting the hybrid it is absolutely necessary to fix it and render it stable, because hybrids are notoriously variable; so it will require from five to six years longer to fix the strains we have already secured. That is not the case in selected strains of Sea Island because they are already bred up to the length of fibre, and it simply remains for us to prove that we have a resistant strain, and then to produce seed of it in sufficient abundance to send out. Even this, however, requires time.

Mr. C. M. SEARS. In the case of the wilt, if the production of a strain which will resist this fungus will take as long and require such an enormous quantity of seed, I should think by the time that the healthy seed got to the farmer, he would not have any cotton alive, if it took five or six years to produce the seed.

Mr. H. J. WEBBER. That is an important point. We must not attempt to produce all the seed for the farmer. We must put the information in the hands of the farmer so that he can select the seed and produce the resistant strain for himself. It is perfectly possible for the farmers to do this, and we shall simply put the knowledge in their hands which will enable them to do so. Of course you understand that if we have one plant which produces resistant seed, it will only produce 500 plants the first year, which will give enough seed for five acres the second year, and a general crop the following year. It will thus require a considerable period of time to secure sufficient seed of any desirable strain for a general distribution.

The PRESIDENT. The next paper to be presented this evening is The Use of Stationary "Cells" in Place of Rotating Cylinders in the Drying of Textile Fabrics, by CHARLES H. FISH of Dover, N. H., a member of your Board of Government. [Applause.]

Mr. CHARLES H. FISH. It may be safer for me in the beginning to explain that the word "cell" was chosen on account of the shape of these cans or heaters, and the word does not indicate what some might naturally imagine, unless they refer to the spelling.

THE USE OF STATIONARY "CELLS" IN PLACE OF ROTATING CYLINDERS IN THE DRYING OF TEXTILE FABRICS.

CHARLES H. FISH, Dover, N. H.

In the ordinary and well known method of drying fabrics or yarn, the material is led on to steam heated rotating cans or cylinders, passing from one to another for the entire length of the machine, with or without the assistance of guide rolls, as the case may be. There is more or less trouble with this method of drying, arising from the fact that these cylinders must rotate while they are receiving their steam supply, and that the water of condensation must be continually removed.

The only apparent way to admit steam to the cylinders and to get the water out of them is through the journals. These journals, however, must be made hollow, and must also be packed in such a way that the steam will go into the can and not blow out into the room, and the condensed water must be made to flow from the can into the proper drip pipes without leaking. To accomplish this, there are several methods now in use by machine builders. Figure 1 shows perhaps one of the most successful. It can readily be seen that if undue friction is to be avoided the gland which presses against the packing must not be screwed up too hard. It must, however, be screwed up hard enough to prevent leakage.

Investigation will probably show that in practice most cylinder journals do have the packing screwed up harder than necessary, for as long as the packing is leaking, the attendant will con-

tinue giving it another turn with the wrench, without regard to whether the packing itself is in good condition or not. On sets of cylinders the adjustment of the different stuffing boxes will vary from a very hard "set up," which makes a good form of brake, to a loose or slack adjustment, allowing a bad leak. At the very best, with intelligent care, it is certain that a great deal of power is absorbed by the numerous stuffing boxes. The cost of labor and material used in repacking the journals is also quite an item.

Of course the larger in diameter the journal, the more power is lost in friction. This seems to place a limit on the size of the steam opening into the cylinders.

As to the difficulty in getting the water of condensation out of the cylinders, it must, as we have said, come out through the hollow journal, and as it would not do to let the cylinders run half full of water, some means must be provided for raising all the water to the height of the journal. Some devices for doing this, work well at low speeds, but are more or less inoperative at

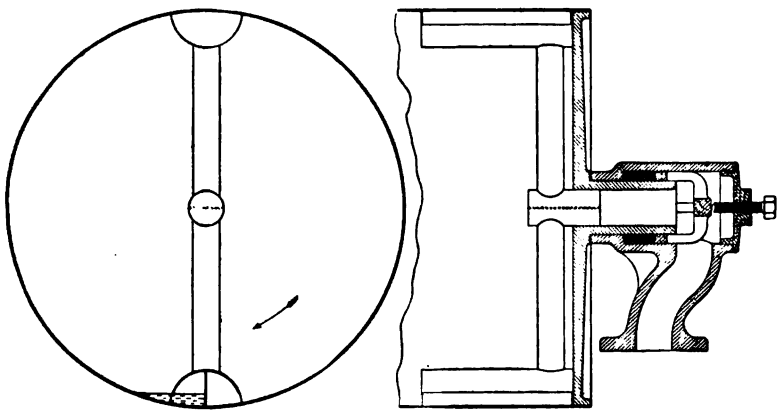

FIGURE 1.

high speeds of rotation. Figure 1 illustrates a bucket or scoop arrangement which is in common use. As the steam is condensed, the resulting water is supposed to drop to the bottom

of the cylinder, where the bucket scoops it up as the can rotates, raising it until it gets to the height of the journal, when it is free to run out into the atmosphere or drip piping. At high rotative speeds, however, the effect of centrifugal force is to retard and even prevent the proper discharge of the water from the bucket. Then again the buckets, being out of sight, and located where there is no opportunlty to get at them easily, are liable to become inoperative, and remain so, either by getting bent or by filling up or by breaking away from the shell or head. Usually the first defi-

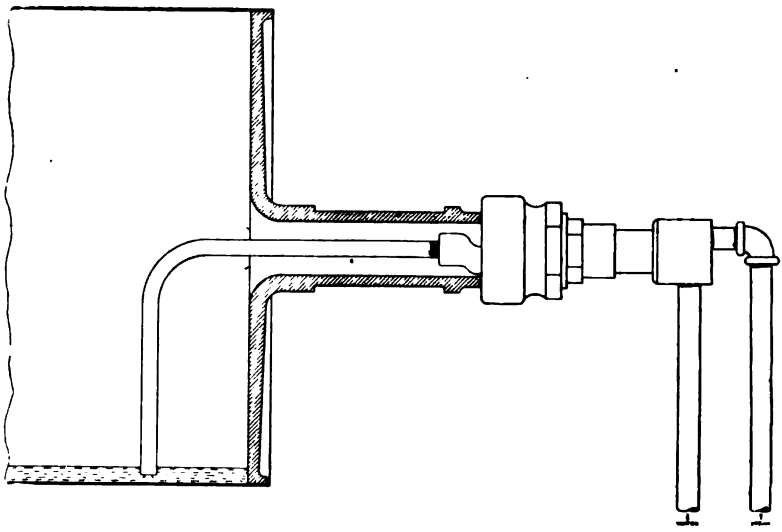

FIGURE 2.

nite intimation of any trouble with the buckets is the collapse of the cylinder caused by the sudden condensation of steam, or by the weight of the water it contains, although often cylinders run for years with their usefulness greatly impaired on account of improper drainage. I think it is safe to say that the majority of cylinders running today are imperfectly drained.

It will also be noticed that when the bucket is at or near the top during the rotation of the can, there is nothing to prevent steam escaping out of the drip outlet.

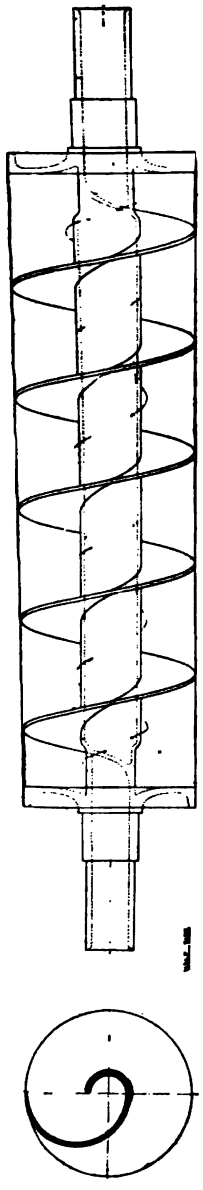

FIGURE 3.

Figure 2 shows a syphon arrangement often used for getting water out of cylinders. This arrangement depends, at least for starting, on an excess of pressure inside of the can over that of the atmosphere or system of piping into which the drips are discharged. After the discharge is started, and as long as the end is sealed by water, it may act as a syphon. The excess of pressure at starting must be great enough to raise the water to the height of the journal. It is a well known fact that at times, in consequence of a large amount of steam being condensed in a cylinder, the internal pressure is very low. With a syphon, as with the bucket, we are never sure just what the conditions are inside the cylinder, whether water is collecting or not. At high speeds the syphon is even less effective than the bucket, as the water, instead of remaining in the bottom of the cylinder, tends to follow up the side, out of reach of the syphon tube. Another objection to the syphon arrangement is the complication in packing the journal to prevent leakage. This is shown in Figure 2. It is very common to have the syphon for taking out the condensed water, pass through the same journal that the steam is admitted. This is a bad practice, however, as the entering steam is being continually cooled by the stream of water from the cylinder. Moreover, to get suitable size openings, the journal must be large, causing frictional losses.

Another trouble found with drying cylinders is their liability to collapse from external pressure, caused by the formation of a vac-

uum inside. To guard against this, the ordinary form of drying cylinder is equipped with air valves, which are supposed to prevent the creation of a vacuum by admitting air into the can whenever the pressure inside falls below that of the atmosphere. These air valves, however, do not always prevent collapse.

Figure 3 shows a cylinder which was designed with a view of overcoming the objection to the ordinary buckets or syphons, and which is now in use at the Cocheco Print Works. The principle is that of an Archimides screw supplemented by a converging spiral at each end, terminating in a hollow journal. The water of condensation falling to the bottom of the can is pushed along to the further end where the converging spiral empties it into the hollow journal. The steam going in at one end, has got to traverse the whole length of the spiral passage, before it can get out. There are no short cuts. The steam has to go where it will do the most good, and cannot escape until it has done so. This can works well at high or low speeds, draining the water almost to the last drop. Centrifugal force does not affect it adversely, as, even if the water tends to cling to the side of the can, it cannot get away from the screw which is continually pushing it along. Moreover, the pressure of the entering steam is always directed towards clearing the passage of water. This pressure acts in this way regardless of the speed. Another advantage in this construction is that the spiral acts as an internal brace, making collapse impossible. For constructive reasons, this device is more suitable for the small cans for which it was designed, than it would be for larger ones. The other disadvantages remain, also, in that it must revolve and the journals must be packed.

What has led us to seek an improvement over rotary cylinders, in addition to the reasons given above, is the difficulty in arranging them compactly. They occupy too much space for the drying surface available. Take the shell of a three-foot cylinder, flatten it into a long narrow eclipse; you have the same heating surface remaining, but look at the space occupied. This has

FIGURE 4.

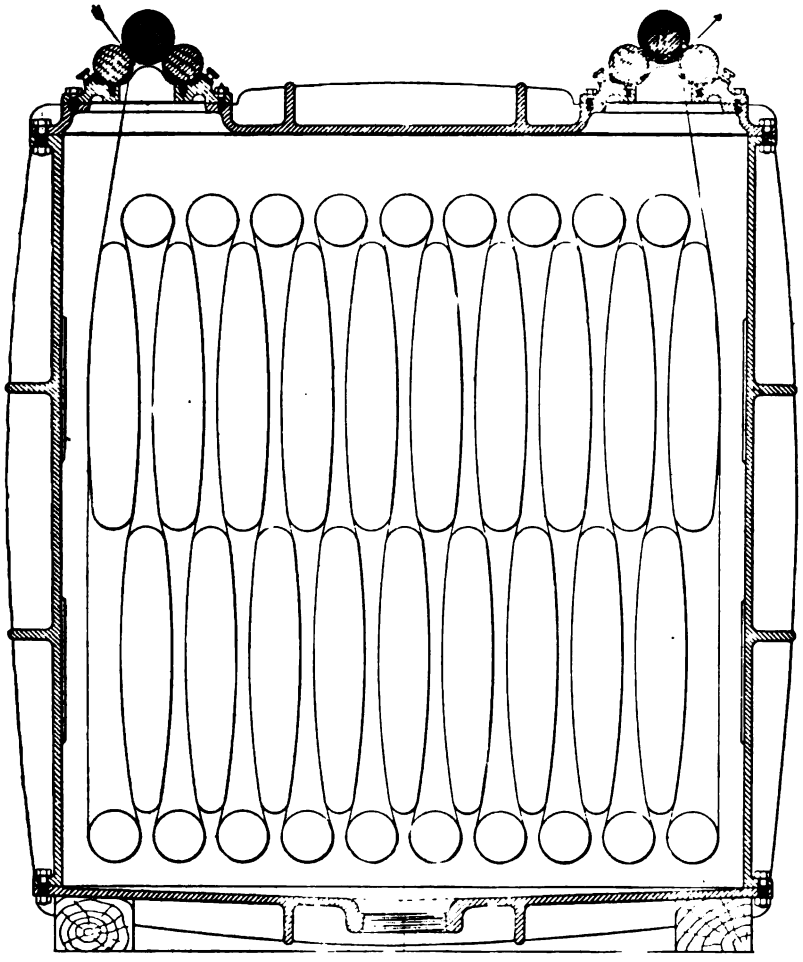

FIGURE 5.

been reduced to an astonishing degree. Heating surface without bulk is what we are after.

We have recently designed and built at the Cocheco Mfg. Co. a cloth drying machine made up of elliptically shaped plates or "cells" arranged in tiers. These cells are crowned just enough so that the cloth in passing from one guide roll to an-

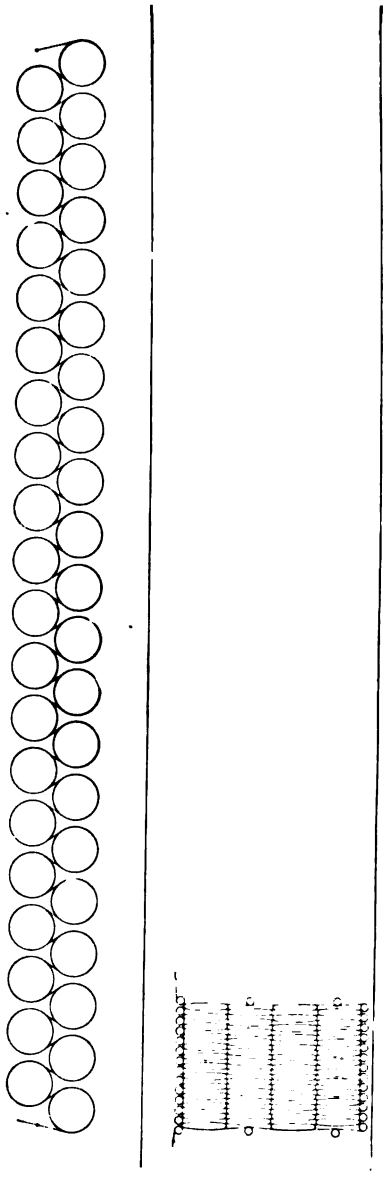

FIGURE 6.

other, is in full contact with each surface. Figure 4 gives a view of an individual cell and Figure 5 shows one way in which they may be arranged. It is obvious that they may be grouped in one, two, three, four, or even more tiers. When arranged in tiers, they are so placed that each surface of each cell is substantially tangent to the surface of the cell above and below, or its guide roll. The object of more than one tier is to permit of a compact arrangement, and to keep the size of each cell as small as possible. The cloth is drawn over the cells by guide rolls, part or all of which are driven positively. Steam is admitted to them through openings near the middle of their height. The water of condensation flows off by gravity, the pipe connection being made at the lowest part of the cell, so that each is perfectly drained at all times.

The size of these cells as now built is about 22½ inches high, 4 inches thick at the thickest part, and 43 inches long over all. We have used two methods in the construc-

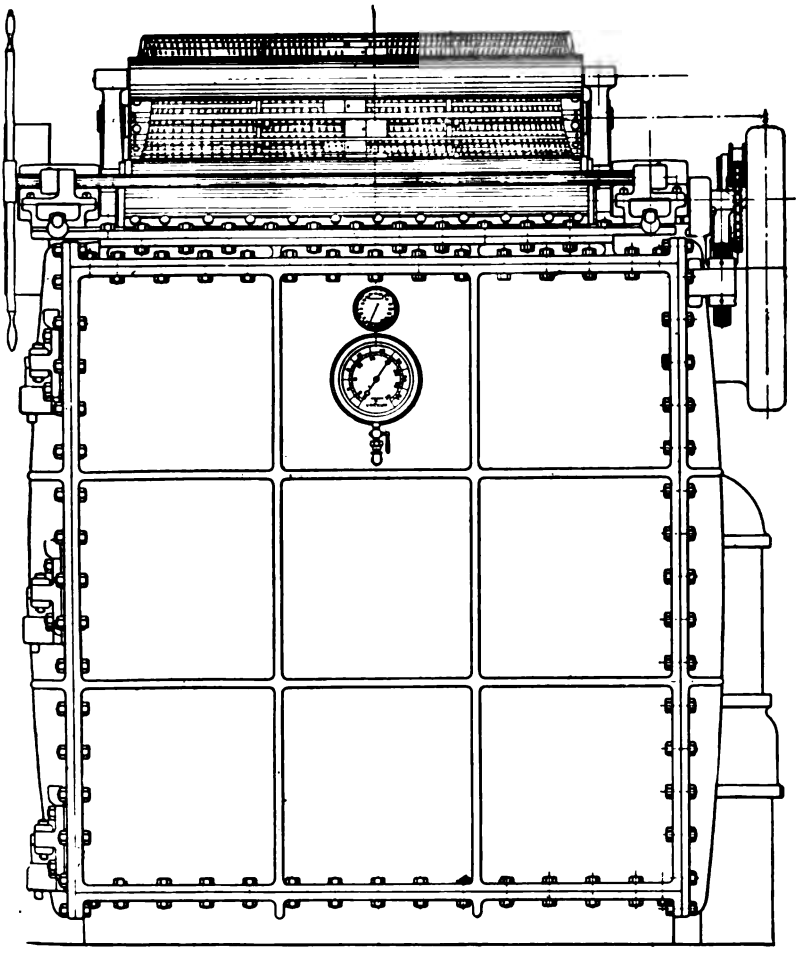

FIGURE 7.

tion of these cells; one is to make them of copper plate with brass heads and internal braces. The other is to make them out of a single brass casting.

Now, as to the manner in which the cells overcome the objection to rotary cylinders, which we have noted:—

1st. There are no journals to pack. This means no loss of

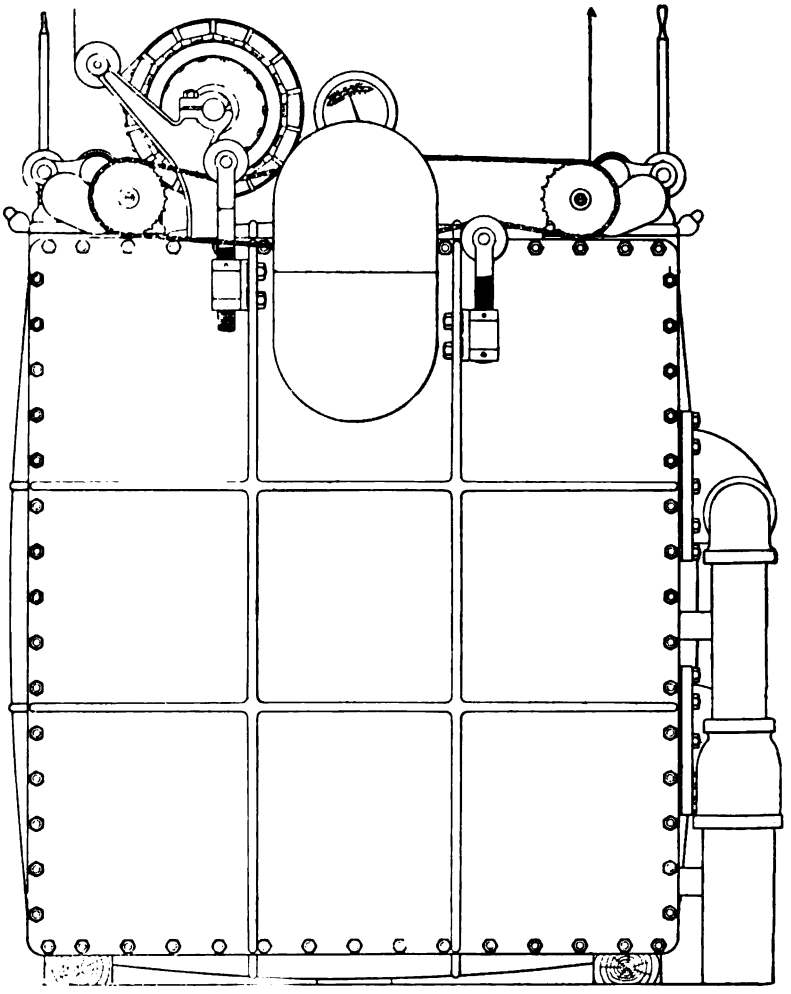

FIGURE 8.

power by friction in stuffing boxes, no cost for packing renewal and attention, no leaking stuffing boxes, therefore no man with a monkey wrench.

2nd. There are no buckets, scoops, or syphons required, since the water of condensation flows out by gravity and the cells are perfectly drained at all times.

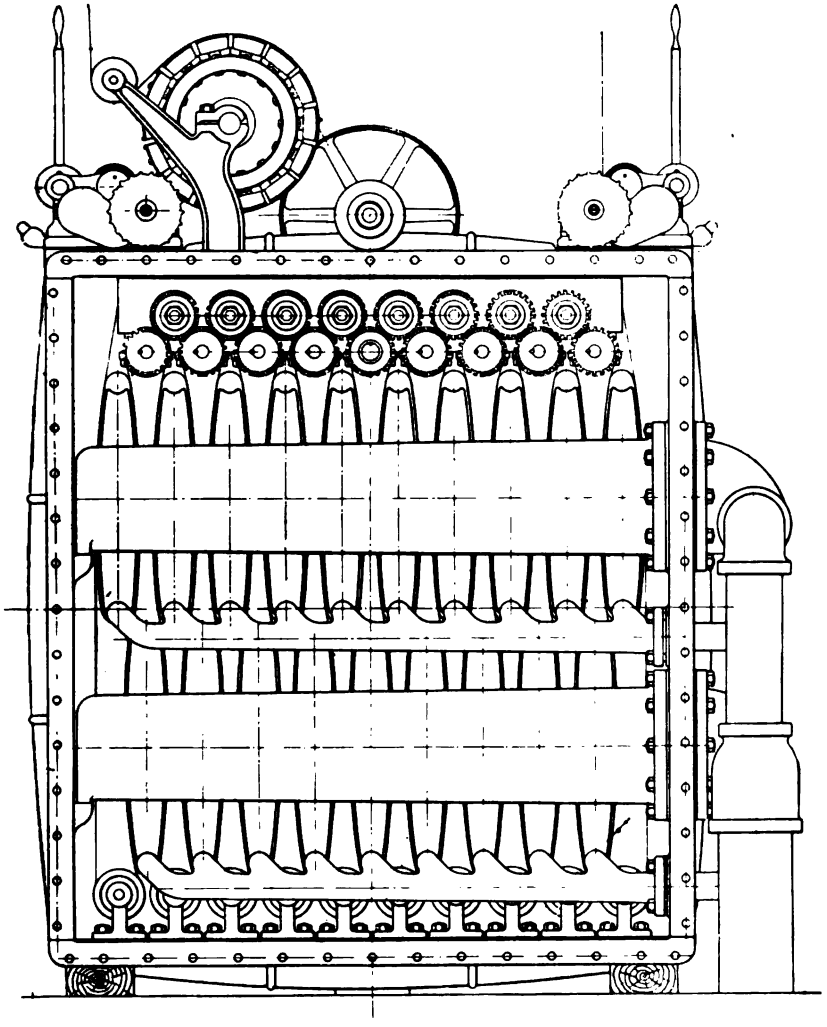

FIGURE 9.

3rd. A very compact arrangement of heating surface is possible.

4th. There is a minimum amount of ineffective heating surface.

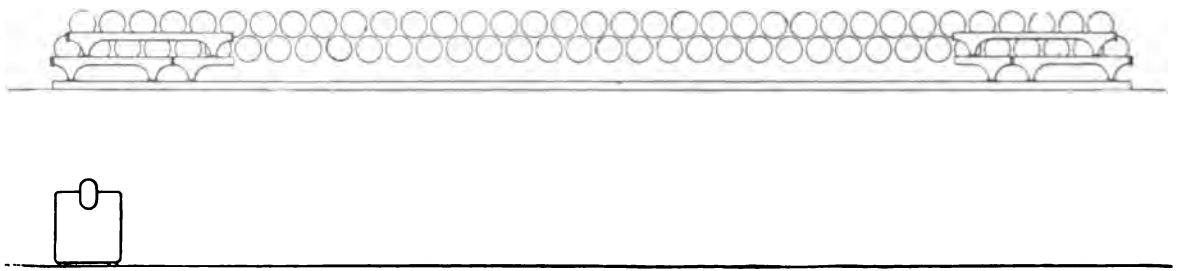

FIGURE 10.

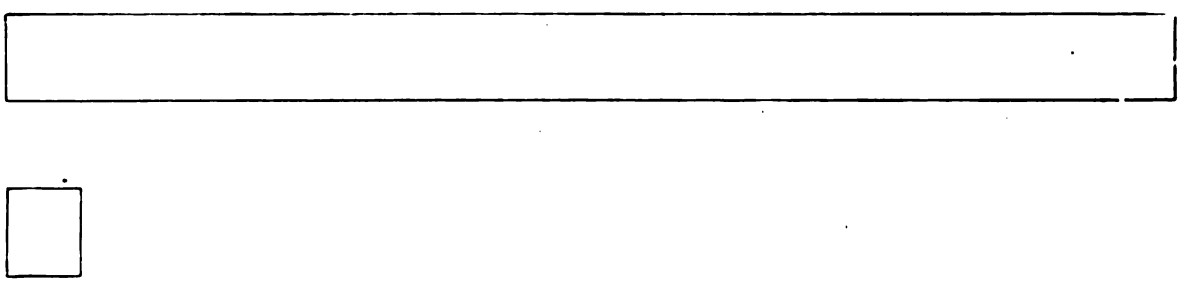

FIGURE 11.

5th. The size of steam openings into cells is practically unlimited.

6th. Owing to the construction of the cell, collapse is impossible and no air valves are necessary.

As far as we have been able to judge, the cloth runs equally well over the cells as over cylinders, the slight ironing effect seeming to assist the drying process.

To illustrate the compact arrangement possible and small amount of heating surface not in contact with cloth, as compared with cylinders, we have represented in Figure 6 an ordinary 41 cylinder dryer and below it a cell dryer having the same effective heating surface. The drawing is to scale. In the case of the cells, 84½ per cent. of the total heating surface of each is in direct contact with the cloth being dried, while is the case of the cylinder only 70.8 per cent. of the heating surface is thus made effective.

The cell principle is particularly adapted to use in a vacuum dryer, as in such a machine the inherent advantages of the cells become far more important than in a machine for drying in the air. Figures 7, 8 and 9 show three views of a vacuum dryer which we have designed and built on this principle. In Figure 9 the cells may be seen inside the vacuum chamber. They are supported at one end by the steam header which admits steam to them. At the other they are supported by channel irons. The drips discharge into manifolds below the steam headers. The general simplicity is apparent.

This machine has a theoretical drying capacity with 25 inches vacuum, of ninety-five (95) two-yard cans drying in the atmosphere. In practice we should realize about 75 per cent. of this. This makes a vacuum machine of this construction which is only about five feet long, have a capacity of seventy-one (71) two-yard cans, which would take up in floor space about 80 feet in length.

Figure 10 shows a comparison drawn to scale between this vacuum dryer and a set of two-yard cans of equal actual capacity drying under atmospheric pressure.

Figure 11 shows relative floor space occupied.

The PRESIDENT. Are there any questions to be asked of Mr. FISH? If not, we will proceed to the next paper on the Uses of Cotton Waste, by Mr. EDWARD W. THOMAS, of Lowell, Mass.

Mr. EDWARD W. THOMAS. Mr. President, this paper is rather lengthy, and I think it would be more interesting to show the samples that I have procured across the water.

The PRESIDENT. We will leave the matter to your discretion and shall be very glad to hear anything you have to say.

Mr. EDWARD W. THOMAS. I will state that in the preparation of this paper on the utilization of waste made in our cotton factories, I do not attempt to present anything original. The paper is mainly made up from the best sources of information available, and I am very frank to say that the amount thus obtained for various reasons is in a measure somewhat obscure and limited. I think, Mr. President, that instead of reading this, I would prefer to show these samples. I simply want to state that last year there were 25,000,000 pounds of waste taken from the mills in the United States and sent abroad to be manufactured into merchantable goods. I have with me some samples that I think will be very interesting to the members to look over. I do not think I will take any more time.

The PRESIDENT. We abide your pleasure. It may suffice if you will make such allusion as you please to them, and explain their uses.

[Mr. THOMAS exhibited these samples and explained them informally to the members.]

THE USES OF COTTON WASTE.

EDWARD W. THOMAS, Lowell, Mass.

In the preparation of this paper, upon the utilization of waste made in our cotton factories, I do not attempt to present anything original. The paper is mainly made up from the best sources of information available, and I am frank to say that the amount thus obtained, for various reasons, is in a measure somewhat obscure and limited.

Having been interested in the subject for some years, about a year ago, I asked the Hon. C. H. ALLEN, then Assistant Secretary of the Navy, to call the attention of the State Department to the importance of obtaining, through the consuls of the various manufacturing centers of the continent, as much information as possible. This was done, and the reports of the various consuls upon the subject may be found in the printed Consular Report issued last August, and bearing the number 239. I have, however, introduced into this paper extracts, and in some cases the full reports of the consuls. Several of the largest machine builders of England have, through their agents in this country, furnished me with considerable information and samples of goods manufactured from various grades of waste, the lowest of which the great majority of the manufacturers of this country sell, deeming it unprofitable and unwise to manufacture into salable goods.

That there is a necessity for this country to take up this subject and give it thoughtful attention, there can be no question of doubt.

It has seldom happened that events have transpired within a

half year such as have occurred in the cotton manufacturing industry since our last meeting in April, at which time cotton manufacturing in general had been prosperous prior to and immediately following. Conditions have of late been a severe contrast, as compared with that period.

At this writing, the war in China, the conflicting reports of the incoming crop of cotton have had a deleterious effect on the sale of goods, and have had their influences in the cotton markets of the world. This uncertainty has visited all sections of this country and England, and all mills with but few exceptions have felt its effects. To the Northern manufacturer, it only brings up more vividly than ever before that he has certain imposed limitations to overcome in some way, or else meet with inevitable disaster. We must admit, if never before, that Southern competition, instead of being a bugbear, has assumed a shape to that degree that it cannot be further ignored. It has been said that nearly 500,000 spindles are to be put in operation in the year 1900 in the southern states, in addition to those already in, and the prediction has been made by many Northern manufacturers that the question of obtaining help for this enormous increase is a most serious one for the Southern manufacturer to meet. It must be conceded, however, that it would be very unwise for the Southern manufacturer to expend the money in building and equipping mills unless he had taken the labor question into consideration, and fully fortified himself on this point. Without being an alarmist, I predict that during the next five years it will be more difficult for the New England mills to be kept in full operation on account of scarcity of help than our Southern friends will find it to furnish help for their new additions. In some sections of New England, it has been manifested for some time that native help was growing scarce.

A report of a high official in Quebec, recently published, states that the Canadian people are returning from the New England States in large numbers for permanent residence, releasing mortgages on their property, or buying and settling on new lands, and that twice as many have returned to Canada the

past year as have left for the States. We are drawing from the shores of the Mediterranean people to fill up the vacancies in our mills. To what extent this can be done, I do not know, but it is a well known fact that our native help, and our Canadian employees, are rapidly vanishing from our mills. In Massachusetts this is particularly noticeable; the restriction laws for minors and children, the general use of double roving and high creels on ring spinning frames, shuts off a class of small help who were formerly employed in considerable numbers throughout the mills.

Now, the foregoing elements as stated, viz.: Southern competition and scant supply of help are factors for the Northern manufacturer to meet, How shall it be done? Make finer goods, as has been suggested by some? We cannot all do this without rebuilding, purchasing additional machinery, and generally reconstructing our plants; and, even if we could and did, it is beyond our knowledge at the present time whether the foremost and most progressive Southern mills would not follow in our wake. There can be no question as to climatic conditions, and skilled work people, doing all that we are in the North, except perhaps spinning and weaving the very finest combed yarns. I am told that some mills in the South are today spinning comparatively fine combed yarns, the labor cost of which is far below our Northern costs.

I wish to insert here extracts from an article recently published in the *Review of Reviews*, which will bear your earnest thought and study, the extracts referring to cotton manufacturing in the South:

"The situation today is full of promise for the future; the long-established paradox has been overthrown; the normal is asserting its sway. An evolution through processes so natural can but proceed to happy consummation. It is estimated that, with American labor and methods, something less than eight times the present number of spindles in the South will be needed to convert our annual harvest into yarn. At the rate of progress now maintained the next century will still be in its first quarter when it sees every pound of cotton grown in

the United States transferred direct from the gins to mills close at hand. This cannot fail to signify that the price paid the producers for the raw material and the cost imposed upon the consumers for the woven fabrics will be more equally based than under the preceding abnormal conditions.

"No obstacle stands in the way of this attainment. No one would stretch a hand to prevent the cotton states from manufacturing all of their staple and selling only cotton cloths and garments to the outside world; thus increasing the annual $300,000,000, which the harvest from their fields has been bringing, to the $1,000,000,000 it is capable of commanding. The sane man does not live who would dispute the right of any section to the richest possible results of its own productive industry.

"Casuists ask if we should not hesitate in our advance, because of the disasters we may bring upon manufacturers in distant parts. The question scarcely deserves to be taken seriously. A return to the natural involves no hurt that is difficult of cure. As far as our brethren of the Northeast are concerned, we have only to point to the inexhaustible ingenuity and adaptability of the American for a satisfying answer. He always makes the best of a bad situation; and this he must now do with his New England cotton mills, all out of place as they are."

Lack of space prevents the incorporation of other portions of the article, which, as a whole, fairly represents the spirit and ambition of the Southern manufacturer.

I have somewhat enlarged upon this matter of Southern competition, as a prologue to what is to follow.

As stated before, the cotton mills of the Northeast must face very serious problems in the near future, the advance outguards of which have been developed in a most striking and illustrative manner within the year. There are many complex problems presented to us for consideration as to the future welfare of our cotton manufacturing, continuing as it has in the past as one of the chief industries of New England. What has happened to the former large, and profit paying industry in iron may happen to us. We have seen the various iron working plants go out of existence on account principally of the building of works nearer the coal mines and iron fields. So, too, it is logical to believe,

at some day naturally the bulk of cotton manufacturing will seek locations near the source of raw material and coal. This being the case, what can be done to retain in part or in whole the great industry of New England. That of making finer goods has been referred to. Up to certain numbers and qualities, there can be no reasonable doubt but what the South can meet us, beyond that under which head comes a line and grade of goods now imported, which we possibly have some opportunity and advantages to make, but the great bulk of the mills are not adapted, owing to construction of buildings, to readily change from their present organization of coarse or medium yarns to an outfit susceptible of being used for the finer class and grade of goods and yarns, When the time comes that the competition of our sister States is such as to push us to the wall, it is hoped that we may be in position to meet such competition and prices for goods by the forwardness, capability and determination which has for many years characterized some of our Northern manufacturers.

It seems to me that there are certain lines that must inevitably be followed out, in order to hold a longer lease of life on this industry, and these are as follows:

First. The consolidation of many of the plants now running, that they may be operated under one head and management.

Second. In such combination, or consolidation, a redivision of the character of the output of each individual mill, that said output shall be for the best advantage of that mill. To illustrate this more fully: If in a combination, or consolidation, of say ten different mills were effected, it is barely possible that each individual mill may be producing eight or ten kinds of goods, or yarns, common to all. It might be, and unquestionably would be, a source of considerable economy for each of the ten mills to be confined entirely to one or two grades of goods; thus the help in each mill would become particularly the weavers experienced in those lines, and, thus, the constant changing of rovings, yarns and grades of cloths would in each mill be brought to a minimum. The economy thus obtained

would be considerable. There is no reason why one treasurer, or general manager, would not be able to purchase cotton, coal, etc., for an aggregation of an unlimited number of spindles and looms, and have better opportunities for thorough complete organizations than our present systems of small independent and individual plants, which naturally have to compete with each other. That the experience of such combinations the past few years has proven a success, we have but to look at the American Woolen Co., American Thread Co., and the New England Yarn Co. The economical features of consolidation have been shown in the systems of railroads in Massachusetts alone. Three large companies now practically control all the roads of the State, where not so many years ago there were dozens of different roads. The traveling public have been greatly benefited by reduced fares and reduced freight rates, better train service and an evident desire to cater to the public's desires.

Third. A more careful, painstaking management than has been in existence. Criticism may be made on what is said upon this subject. I do not infer that our mills are grossly mismanaged by any means, but what I do mean is that we must give more attention to savings effected by close watching and the following up of many matters that by reason of our being enabled to possibly pay fair dividends to our stockholders, we have not given the attention to that might have been shown. We have had, since the industry was incepted, to bear one burden imposed upon us, for which our predecessors were in a measure to blame for allowing to exist, and that is the shameful way we have been obliged to receive our raw material. The loss of waste from improper ginning, grading, packing and shipping has cost us millions of dollars. Some meritorious effort has been made of late by ginning companies to remedy this, and give to the manufacturer cleaner and better packed cotton. Many of us have tried, and some are continuing the use of the round bales so-called, and found the loss from false packing, sand, hoops, and sacking to be materially in favor of the round bale. Now, notwithstanding that there is a gain in the new

methods of baling, in so far as first loss by reason of the outer covering of the bales has been lessened, we have, incidental to the various operating machines in our mills, a large per cent. of waste made of various degrees of value. Some of this waste is reworked by many mills, and in many it is all sold, the latter striving to make their goods to sell on their merit as being strictly from good cotton, so-called, without any rework waste in their make-up.

In a paper prepared and read at the last meeting of the Association, the subject of waste was in a measure discussed. I desire. however, to go a step farther in this paper today.

Incident to all that preceeds, the point desired to be brought to your notice is this: that we *must* realize in some form of finished product the greatest per cent. of each and every pound of cotton furnished us. Our net waste account must be brought to a minimum. A saving of one per cent. in waste is practically five pounds per bale, at ten cents per pound equals 50 cents. The same five pounds, if put into yarns or cloth, may mean from 50 cents to $2.00 or more, according to the selling price of finished material. It may be fair to assume that in the ordinary cotton mill, on medium counts, 88 per cent. of cotton purchased is sold as yarn or cloth. If it is possible, and I believe it is, by the use of round baled cotton, and the conversion of practically all the waste made into some salable goods, then the net waste might result in a net percentage of goods per pound of cotton of from 92 to 95. This saving if effected, would enable every mill to pay a dividend, but we at the North have no patent rights on the system of such savings. We, however, can, and must, work to the end of economy in everything pertaining to our business. In point of fact, there are yet many questions that the manufacturer must surely take up in order to obtain the largest product from a given amount of raw material, at a minimum cost, and preserve the quality of his goods.

Coming, now, to the matter of reworking waste, we should give this considerable thought, as we are confronted by the

efforts of the continental countries, who have made this a subject of constant and thorough investigation, and have been and are able to produce goods of superior quality for the kind, out of the refuse cast aside by our mills in this country. During the twelve months ending June of this year over 25,000,000 pounds of waste was sent out from this country, and this amount was said to be about twice as much as was sent out in the preceding year. There are no new developments to be given in this article as the systems were very thoroughly gone over with in the most excellent article read by Prof. C. P. BROOKS* at the Profile House in October, 1896, with the possible addition of a system of cup spinning, in which the condenser bobbins, or spools, are spun from direct. This system is known as "Chapon's" and the machine is built by the Messrs. Platt Bros., of Oldham, England, who are represented by E. A. LEIGH, Esq., of Boston. It is claimed that, in comparison with the mule or jack, ordinarily employed, this machine, for a certain amount of weight of yarn, occupies less floor space, consumes less power, and may be operated by unskilled help. This machine is of special advantage where the numbers to be made are from No. 1 to No. 4. The operation of the machine is simply to put in twist from the condenser bobbins. For numbers up to 2's the machine makes a cop of 9½ inches to 10 inches long and 2¼ inches diameter, from 2's to 4's, cop 8 inches to 9 inches long and 1¾ inches in diameter. It is claimed that for the same production, less floor space is required, cheaper labor and less cost than with the mule.

As stated before, there is no occasion to amplify the details of the machinery now in use in foreign countries for reworking waste, as the subject is so thoroughly treated in Prof. BROOKS' excellent paper.

The following additional information, however, may be of interest, as it has recently been obtained through the State Department in a general inquiry letter sent to the various United States consuls located in those countries where the waste is sent from the United States.

*See paper on Condensed Cotton Yarn and the Condenser Card. Transactions New England Cotton Manufacturers' Association, Volume 61, Page 172.

From the report of Consul GRINNELL, located in Manchester, it appears that, in his district, the yarns made are very much cut in price, and not very profitable; and is done very much less than formerly. In his letter is one from Asa Lees & Co., of Oldham, in which they say:

"Probably one-half the waste made in the Lancashire Mills is exported to the Continent, and that waste spinning comprises: Clean, soft mill refuse worked up into wadding; mill sweepings and dirty, oily, soft mill refuse worked up into a coarse yarn, say about 4's, 6's, or 8's, by a special plant; also waste from the different processes known as spinners', reelers', and weaver's waste, including cop bottoms, which is broken up and passed through a special plant quite different from the preceding. Then there is some waste from the winders, spinners, reelers and doublers, which is made into engine or cleaning waste.

The machinery is chiefly made in this consular district. The waste is sometimes spun on ordinary cotton spinning machinery and sometimes by what is known as the condenser system. In the latter case, a large number of threads are taken from the carding engine by the condenser, and these are then spun on the mule, without the usual intermediate process. We make all kinds of machinery for preparing and spinning waste on various systems.

The machines used for spinning waste by the condenser system, which is the best for low numbers, are as follows: Willow, or some kind of cleaning machine; automatic hopper feeder; breaker carding engine; Scotch feed or other feeding arrangement for taking the sliver from the breaker card to the finisher card; finisher carding engine; condenser attached to the finisher card; self-acting mule. When hard waste is used, a machine for breaking it up is also required."

Extract from a letter of Brooks & Doxey, of Manchester, to Consul GRINNELL is as follows:

"The machinery we manufacture deals entirely with the spinning of waste, and naturally, when visiting the various mills in England and elsewhere where this machinery is used, we see for ourselves some of the goods into which this waste enters largely, but not sufficiently to enable us to write an expert opinion upon the matter.

In the first place, we may say that the waste from the English mills is largely exported to the Continent, and our own manufacturers of cotton waste yarn are dealing with only a very small portion of the

trade. Here, so far as we know, the yarn is used for the following purposes: Candle wicks, sponge cloths (these are used in many works in place of cotton waste), towel manufacturing, bed quilts, flannelettes, and in place of flax yarn for the backs of Kidderminster carpets. In very many cases, of course, only one portion of the yarn used in the manufactured goods is made from waste, the other portion being made from good wool or cotton.

So far as we know, the districts on the Continent to which English waste is largely exported are: Verviers, Belgium; Termonde, Belgium; Rhenish Prussia (M. Gladback); Chemnitz, Saxony."

The following is copy of a letter sent Mr. GRINNELL from Messrs. Dobson & Barlow, which is so explicit that I venture to read it in its entirety:

EXPORT DEPT., KAY STREET WORKS,
BOLTON, Feb. 9, 1900.

WILLIAM F. GRINNELL, ESQ.,
U. S. Consulate, Manchester.

Dear Sir — Re Waste Spinning. In accordance with the request contained in your favor of the above date, we have pleasure in giving you below information respecting the spinning of waste into yarn. Waste is classed in this Country under many different heads, such as:

Droppings, from opener and scutching machines.

Flat strips, being strippings from the flats of carding engine.

Grid fly, from underneath card cylinder and licker-ins.

Brush strip, obtained after stripping cylinder and doffer of cards.

Card room sweepings.

Comber waste.

Bobbin waste, from fly frames and spinning machines.

Clearer waste, from top and under clearers of fly frames and spinning machines.

Hard ends, from rovings, cop bottoms, &c.

Fluker waste, from mules.

Carriage fly, from mules.

Spinning room sweepings.

Oily waste.

As you will naturally understand, such a variety of waste requires different treatment, but the general machinery used for converting the same into yarns is as follows:

Self-acting grid and delivery willow for cleaning the waste from sand, dirt, leaf, and other impurities.

Hard-waste breaking-up machine with from one to six cylinders, as required, for breaking up hard waste of all descriptions.

Soft-waste breaking-up machine with one cylinder, for slubbing intermediate and roving frame waste, roller laps, &c.

Single scutcher and lap machine for making the waste into laps preparatory to being placed behind carding engines. Hopper feeders for feeding these machines automatically, instead of by hand, can be applied if desired.

The carding of waste can be performed by two systems viz.:

Carding on Derby doubler system. Breaker carding engine, fed by two single scutcher laps and arranged to deliver the material into cans in sliver form. Derby doubler, fed by 40 to 60 carding engine slivers, as required, to make the same into laps for the finisher carding engine. Finisher carding engine fed by Derby doubler laps, arranged with condenser delivery, for up to 120 threads or slivers, as required, according to the class of yarns to be spun. These threads can be wound on to one, two, three, or four bobbins as desired.

Carding on Scotch feed system, in lieu of above. Breaker carding engine, fed by two single scutcher laps, with Scotch feed apparatus attached, for delivering the material in a ribbon-like form into the finisher carding engine. Finisher carding engine, fed by the Scotch feed apparatus mentioned above, arranged with condenser delivery as on the finisher carding engine, mentioned above, in the Derby double system. Self-acting billies, fed by the condenser bobbins from the finisher carding engines, of either the Derby doubler system or the Scotch feed system, which ever is preferred for spinning into yarn.

The above machinery is used in the process of making the waste into yarns, and is as far as our manufacturers go. The after operation of weaving the yarns into finished goods, such as cotton blankets, counterpanes, quilts, etc., is a separate industry altogether, and the particulars of the necessary machinery and the process the yarn undergoes previous to being made into finished goods must be obtained from the weaving machinery makers.

Respecting your remarks *re* the amount of waste products from cotton mills in this district reworked into finished yarns or fabrics, we beg to state that this is a rather difficult question, owing to this particular industry being kept secret by the various manufacturers. We can, however, state that it is carried on to a large extent, there being at least

seven mills in this district engaged in the waste trade, some of which have their own cotton-spinning mills and thus work up their own waste, while others are entirely waste mills, that is, they buy the waste from the different cotton mills and spin it for sale.

Trusting the foregoing information will prove of service to the United States Government, we are, etc.,

DOBSON & BARLOW, *Limited.*
W. HIGGINSON, *Director.*

From the foregoing it is quite evident that the re-manufacturing of waste has not as yet been carried out in so full a degree as it has on the Continent.

From Berlin, Consul General MASON states as follows:

"I have endeavored to obtain the desired information by correspondence with cotton brokers and the managers of cotton-spinning mills in Bavaria and Saxony, but to all my inquiries there has been received but one reply, a respectful but terse and firm refusal to impart any information whatever. The subject is a technical one, and, in my opinion, can be satisfactorily investigated only by an expert who is not known to be connected with a United States consulate. It is now a fundamental principle among German industrials to give no technical information to consular officers of the United States.

It remains for me to report that the total import of cotton waste and its origin during the eleven months ended Nov. 30, 1899, was as follows, it being, of course, impossible to ascertain what part of this import, if any, was used as material to be reworked into yarns and fabrics:

	Metric Tons.
Belgium,	1,307.5
France,	3,587.1
Great Britain,	8,914.4
Italy,	943.4
Netherlands,	5,818.9
Austria-Hungary,	4,177.3
Switzerland,	1,604.3
British East Indies,	1,504.1
United States of America,	4,861.6
Total,	32,718.6
Imports for same period in 1898,	31,364.3
Imports for same period in 1897,	26,853.2

From Bremen Consul DIEDERICH reports, a portion of which is interesting reading, and shows to what extent "secret" processes of reworking waste is regarded on the Continent. Under date of April 12, 1900, Consul DIEDERICH says:

"There are but few cotton mills in this consular district, although Bremen is the chief cotton market in Germany. Besides I find it extremely difficult to get any satisfactory information from the few concerns engaged in using cotton and manufacturing the raw material into yarns and various fabrics. No statistics of the import of cotton waste from mills in the United States are obtainable, as most of this is said to go to Hamburg.

One factory near Bremen reported that the quantity of such waste amounts to 10 per cent. of the raw material used, but my impression is that this statement is mere guesswork.

The machinery used for reworking this waste into yarns, textiles, cordage, ribbons, wadding, and other articles made from cotton is manufactured in England and in Saxony, where most of the weaving and spinning machinery is made.

There is just one factory in my district, called a cotton-waste spinning mill, which could give us all the information needed, were it so inclined; but the proprietors of these mills claim that they were under heavy expense building up this new industry, paying very dearly for their experience, being thrown entirely upon their own resources, as there had been no like concern in operation from which they might have learned. They declare themselves willing for 20,000 marks ($4,760) to not only show their plant to any interested parties, but to fully and thoroughly initiate them and teach them all they themselves know. This tuition fee may seem somewhat large, and perhaps might be reduced; but if I were anxious to find out all about cotton waste and how it can best be utilized for the purpose of investing money in a similar enterprise in the United States, I believe I would take such a course of instruction and pay for it."

From Hamburg, Consul PITCAIRN reports as follows:

"Waste products of cotton mills, which are largely imported from the United States into Germany, via Hamburg, are not reworked into finished yarns or fabrics within this consular district, but are reshipped to the German and Austrian cotton-industry districts in Saxony, Rhine Province, and Bohemia.

The imports of cotton waste into Hamburg from the United States during the year 1898 amounted to 9,373,400 kilograms (21,467,072 pounds), valued at 4,546,420 marks ($1,082,048); but I am unable to obtain statistics of reshipments.

Under the circumstances, I am further unable to obtain reliable information as to the machinery used in the various processes for reworking cotton waste.

I have learned that there is a merchant in the city of Heidelberg, Baden, who buys a large amount of cotton waste; but I do not know in what manner he disposes of it."

From St. Petersburg, the report of Consul General HOLLOWAY states:

"The waste products of cotton mills in this consular district are reworked into finished yarns or fabrics, as is done in England, the Russian cotton mills being run by natives of that country.

I have been unable to learn that waste from American mills is used in this consular district."

From the foregoing it is readily seen that from the manufacturers themselves but little information can be obtained of their methods.

The machine builders of this class of machinery were asked for information, and the following are copies of letters and in some cases extracts of others.

One of the best known machine builders in England states:

"The waste spinners and manufacturers in this country confine themselves to making from waste droppings from cards, strippings and any other waste, *Sponge Cloth Yarns* which they double and from which they make clearing cloths for engineers. These cloths are sold at a very low price and the makers undertake when selling to take the cloths back when dirty, wash them, and return them to the owners free of charge. They, the makers, make a profit from the oil which they extract from them when they come from the workshops.

The next important trade is in *Cotton Blankets* made from condenser yarns from card strippings. These blankets are made and finished on a raising machine and are sold to the poor classes in this country as well as a large quantity being shipped to the East.

The next is in *Sheetings*. These are made in so many qualities that it is difficult to define them. Some makers use nothing but the best of waste, others using nothing but cop bottoms and fly.

The next is in *Tapestry Yarns, Colored and Uncolored, and Hammock Yarns*, which are doubled and such as are used very extensively in South America. Further, I may mention here that there are a good many firms who make comb *Towels*, &c., from cop bottoms and card stripping of American and Egyptian cotton, putting in the mixture of a *Trichinopoli Cotton* to keep the color up in plain cloths or whites.

The next important market is in Lodz, Russian Poland. Here they make all kinds of *Imitation Woolen Cloths* from every kind of cotton waste, chiefly colored, the waste being dyed in the rough. The chief qualities and style of goods are imitation *Woolen Underclothing* for *Women* and *Cotton Rugs* such as are used by the natives in Siberia, Northern India and China.

The next great field for cotton waste yarns and goods is Saxony, Germany. There they make imitation and *Worsted Cloths*, and I may say that the most important trade is in *Cotton Trouserings* of all colors, shades and styles, and they work their machines on quite a different principle than they do in this country."

Another and presumably the largest builder of waste machinery says, and I give some specifications as to his machinery.

"We advise for machinery to prepare, card, and spin soft cotton waste, such as card fly, strips, droppings, etc.:

One Willow with patent tilting feed and overhead delivery creeper and dirt remover. Production about 8,000 pounds per week of 56 hours.

One Pickering Machine fitted with our patent welded light wrought iron cylinder on which toothed lags are mounted, steel cylinder shaft with hardened necks; new pattern of back cutter; reversing motion; lattice feeding apron and special hand feeder. Production about 8,000 pounds per week of 56 hours.

One Single Beater Lap Forming Scutching Machine with hopper feeder. Production about 1,800 pounds per week of 56 hours.

One Single Breaking Carding Engine 48 inches wide, with feeder arranged to receive two laps from scutcher, one pair feed rollers fluted or covered with a metallic filletting, one humbug roller 3½ inches diameter, one taker-in 8 inches diameter, cylinder 50 inches diameter, doffer

25 inches diameter, seven rollers 6 inches diameter, seven clearers 2½ inches diameter, one wood lagged fancy 8 inches diameter, doffing comb and motion. Iron beam between fancy and roller above. Special steel hinged cover over the fancy. Improved concentric bands with brackets arranged for quick adjustment of the rollers and clearers. Space in the bends for traverse of grinding apparatus. The taker-in, rollers, clearers, and fancy fitted at each end with patent cast iron shrouds to case up the same. Rollers prepared for chain or rope driving. Polished mahogany covers with holders to cover the rollers and clearers. *Patent Side Drawing*, with endless belt, gearing, and covers.

One Single Finishing Carding Engine, 48 inches wide, with our *Patent Scotch Cross Feeder*, including sliver conductor, overhead creeper and balance for traverse of sliver. one pair feed rollers fluted or covered with metallic filletting, one humbug roller 2½ inches diameter, one taker-in 9 inches diameter, cylinder 50 inches diameter, one wood lagged fancy 8 inches diameter, doffing comb and motion. Iron beam between fancy and the roller above. Special steel hinged cover over the fancy. Improved concentric bends for quick adjustment of the rollers and clearers. Space in the bends for traverse of grinding apparatus. The taker-in, rollers, clearers, and fancy fitted at each end with cast iron shrouds to case up the same. Rollers prepared for chain or rope driving. Polished mahogany covers with holders to cover the rollers and clearers complete with *Improved Single Bobbin Condenser*. Production about 800 pounds per week of 56 hours, more or less, according to the class of waste used and counts of yarn required.

Clothing made of five-ply cotton cloth and set with hardened and tempered steel wire, the doffer of the finishing engines to be arranged for card rings and leather rings.

One Self-acting Mule, say of 608 spindles 1⅝ inch gauge with two lines of bottom and one line of top rollers and one line of surface drums with stands to receive condenser bobbins, or

One Self-acting Mule, say of 340 spindles 2½ inch gauge. Production : either of the above mules will follow three breaking and finishing engines. The mule 2½ inch gauge is for making yarn Nos. 2s to No. 4s, and the mule 1⅝ inch gauge is for making yarn above No. 4s to No. 8s."

Messrs. C. E. Riley & Co., of Boston, largely interested in sales of English machinery, and thoroughly versed in the line of waste working, submit the following:

"In Germany and Austria the bulk of the waste yarns are used for what they call 'printed calmuk,' which is made by using the waste for weft, the cloth being raised and bleached after weaving and then printed. We send you some samples of grey by pattern post and also same in different stages and different qualities. Some waste yarns are used for lamp wick and others for sponge cloths or dusters, see sample sent. We may also say that in some cases good cotton is spun on the woolen system instead of waste, and also raised; this is a cloth called 'swansdown,' which is doubtless known on your side also. If you want further information we will try to get it.

The loom for weaving 'calmuk' has a large shuttle and 'negative' take up motion, that is to say that take up is not a certain distance from each pick, but the loom is without the take up beam and it takes up the density of the cloth, same as in some velvet looms. This is done to counteract the irregularity of the counts and thickness of the threads, which is unavoidable in spinning on the woolen system.

The cloth is used chiefly for clothing purposes, but some is also used for curtains.

The raising machine now universally used is the one with a number of rollers covered with card clothing, called the 'Moser' machine.

In this country broken up cop bottoms are spun on this system for weaving into common bed sheets and bed coverings, but this material needs special treatment."

Professor BROOKS, to whom we are indebted for his valuable paper on working waste, has kindly consented to furnish this additional information, so that it might be incorporated in this paper, and, as he speaks from a large personal experience, his testimony is valuable upon this subject.

"Germany is the country in which the re-manufacture of cotton waste reaches its highest stage of perfection.

The care and attention which is given to the industry there has resulted in cotton waste being utilized in many directions, but more particularly in the imitation of woolen goods, and this is more particularly the case with manufacturers in Saxony.

The German manufacturers not only use up the whole of the waste of their own country, but are large buyers from other countries; probably all the better classes of American waste are shipped from the United States to Germany.

The Germans use large quantities of waste from other cotton spinning countries, such as India, Spain and Switzerland, and although England has been a cotton manufacturing country for so very many years, it is strange that a large portion of English cotton mill waste is sold through waste buyers to German spinners.

Considerable quantities of the waste used in Germany and Russia are made into wadding, usually a better grade than the American batting and principally used for surgical purposes, and for the packing of jewelry and ornaments, but an immense quantity of waste is re-manufactured into yarn on woolen machinery or an adaption of woolen machinery, which is fully explained in my paper read before the New England Cotton Manufacturers' Association at the Profile House in 1896.

In my investigations on the subject of the utilization of waste abroad, I found it very difficult to get statistics or exact information and only speak in a general way, but I have found that I had one estimate that 228,000 spindles were engaged in Germany on yarns intended to make cheap imitation woolen cloth, coarse hosiery, etc., and that this yarn contains a large percentage, some of it being wholly of waste.

The product amounts to millions of kilograms of which large quantities are shipped abroad as well as being used in Germany.

It was estimated that 42,000 spindles were engaged on hosiery spindles alone, and that the product of the hosiery spindles was chiefly knitted in Thuringia, and that other yarns were made into cloth suitable for furniture stuffs and other purposes.

I am not in possession of much information regarding the reworking of waste in Russian mills, but as I believe that the Russian waste mills are largely owned by Germans, the product will be very similar to the German mills.

In England waste is utilized for many purposes, the commoner kinds, such as picker waste, being cleaned and made into flocks used to stuff bedticks, and for making mattresses. Also, for padding furniture.

The sweepings from the rooms are very often bleached and used as the basis for manufacturing gun cotton. Better grades of waste, such as flat strippings, are respun into carpet yarn, but as I have said before, the manufacturing of waste does not reach the same perfection in England as in Germany."

It has been my object to obtain so far as is possible all the information that could be legitimately obtained, and this article

is not maintained to be original, nor from actual experience, hence the liberal extracts from the consular service reports, and the description of machines and other information given by the various machine builders, in order that such information might be given at first hand.

There can be no question of doubt as to the financial success attending the reworking of waste on the continent. This is shown by the extreme reluctance to give to outsiders any information relative to the system of manipulating the stock, and the undisputed fact that this industry is on the increase.

To prolong our existence at the North, we must, as stated in the first of this article, convert the largest amount of manufactured material from each and every pound of cotton purchased, and that we in this country have the enterprise and spirit to do this, and thus strengthen our possible weakness. There can be no possible reason why our manufacturers should allow 25,000,000 pounds of waste to be shipped to the continent and worked up into such grades of goods as are shown here by sample. It is rather a criticism on our ability as manufacturers. Some, if not nearly all, the samples I have here, show distinctly that the manufacturer on the continent, taking the refuse from our mills, manipulates the same into a good merchantable fabric.

I have only touched upon this subject of waste as one that seems to me incidental to the prolonging of our future in the North. There are other features, merely touched upon in this article, that are of too lengthy a study to incorporate in this paper. With the immense population of this country, and the outlook for the " Open Door " in our Western Countries, it would seem that the waste of our mills could be put into some line of goods that would find ready sale.

The reworking of low grades of waste into fabrics, or yarns, in this country has not been entered upon except in a few isolated instances. Many mills now work over their card, roving and spinner's waste by mixing back into regular work. Some few mills rework the cop waste, after being thoroughly broken up, into the filling. The whole matter is receiving the careful at-

tention of our most thoughtful and progressive manufacturers today.

That a fair class of goods may be produced from the waste sold by the mills in this country is fully demonstrated by the samples here today. What other industries have done in the line of reducing waste, or reclaiming what they make, should set us an example worthy of imitation. The large variety of goods made from these classes of waste opens up apparently a large sphere of action for us to pursue.

The following are some of the products of waste made in other countries: All kinds of yarns and twines, candle and lamp wicking, bath towels and mats, sponge and creton cloths, bed quilts and blankets, sheetings, table cloths, flannelettes, skirtings, denims, cheap cloth dyed for clothing, all weights of napped printed fabrics.

This list does not include a complete list of the various articles manufactured, but is given in order to show the variety that is in the market.

SAMPLES.

Lot "A" From Russia.

No. 1, represents the raw material.
" 2, condenser roving from No. 1 after carding.
" 3, yarn from No. 2.
" 4, cloth woven from No. 3 before receiving any treatment, preparatory to bleaching, dyeing, and printing.
" 5, sample of cloth after being dyed and printed.

Lot "B" from England.

No.	1.	No.	$1\frac{87}{100}$	yarn,	sells for	$7\frac{1}{4}$	cents	per pound.
"	2.	"	$2\frac{87}{100}$	"	"	$9\frac{1}{4}$	"	"
"	3-4.	"	8s	"	"	10	"	"

" 5 is a sample of sponge cloth.

Lot "C" from England.

Low grade mill sweepings, oily card waste, and samples of yarns from same.

Lot "D" from England.

Bath mat, selling price $3.28 per dozen. Made from waste.

Lot "E" from Germany.

Sample of Denim, from cop bottoms: condenser system.

Lot "F" from Russia.

Samples of single and double napped goods printed. Made from low grades waste. Used for dress goods, skirtings, linings, &c.

Lot "G" from Saxony.

Samples of cloth made from floor sweepings, condenser system. napped, dyed, and printed.

Lot "H" from Saxony.

Samples of printed cloths, made from floor sweepings, bleached, and then printed.

Lot "I" from Germany.

Samples of printed cloths, made from cop bottoms, printed and napped. Used for dress goods, linings, &c.

Lot "J" from Germany.

Samples of double napped flannels or felts, from low grade waste.

Lot "K" from Germany.

Samples of printed and napped goods from low grade waste.

Lot "L" from Germany.

Samples of bleached double napped flannels, made from cop bottoms.

Lot "M" from England.

Sample of wiping towel.

Lot "N" from England.

Samples of sheetings, furnished by Barlow & Jones, England. Filling made from broken cop bottoms. Details of each are given on tickets.

Lot "O" from England.

Samples No. 1-2. Cretonne cloth. Filling made from cop bottoms and hard waste.
" " 3. Table cloth, filling same as above.
" " 4-5. Domestic sheeting, filling same as above.
" " 6. Engineer's cloth, filling from strippings and droppings.
" " 7. Cotton flannel twill. Filling from cop bottoms.
" " 8. Sample of a printed skirting, filling made from cop bottoms and hard waste.

Lot "P" from Germany and Saxony.

Samples of printed skirtings. Filling from low waste.

Lot "Q" from France.

Two samples of yarn from the Chapon cup spinning Frame. All the yarns shown by sample are mule spun.

In addition to these samples I have with me cuts of the various machines used in the operations to produce the yarns as represented in these samples, which are at your disposal.

The PRESIDENT. All of you are quite well aware that the question just presented is a very important matter, one which has engaged the attention of cotton manufacturers for many years. Something has been accomplished here, but a comparatively large amount of work has been done abroad, in England and particularly in Germany, in this direction, and there is prospect of a great deal more advance in the art of utilizing waste products. It is a matter which Mr. THOMAS' paper treats of with great care, and I have no doubt that it will receive your serious attention.

The next paper will be the Putting Up of Yarns for Use and for Market, by Mr. F. H. BISHOP, of Boston.

PUTTING UP OF YARNS FOR USE AND FOR MARKET.

F. H. Bishop, Boston, Mass.

In comparison with the great improvements made during the past thirty years in methods and machines for the preparation and spinning of cotton fibre, there have been very few marked changes in the systems or machines for winding yarn for transfer in the mills or for shipment and use. Improvements have taken the form of changes in previously existing machines or in new types of machines adapted to old methods. The use of bobbins or spools for transferring yarns in the different processes has been general in the absence or for the lack of better systems. The first cost, repairs and storage space of bobbins are such important factors in the economy of yarn manufacture, that it has long been recognized that a system of winding yarn in a mass that should be self-sustaining without supporting heads, would be advantageous. The motive of Coombes who invented drum winding machines, was to wind upon a central support without heads, and to make the package self-sustaining by imparting to his yarn guide a quick reciprocation so that the yarn instead of winding in close coils as on the bobbin, would wind in open coils crossing and re-crossing between the ends of the traverse, thus binding down and holding in place the preceding coils. He succeeded in producing a self-sustaining mass, but this advantage was more than counterbalanced by the defects and inequalities in winding.

This system has never superseded bobbins in the mills for transfer work, although it has been used extensively in winding yarn for shipment where the cost of bobbins and of trans-ship-

FIGURE 1.

FIGURE 2.

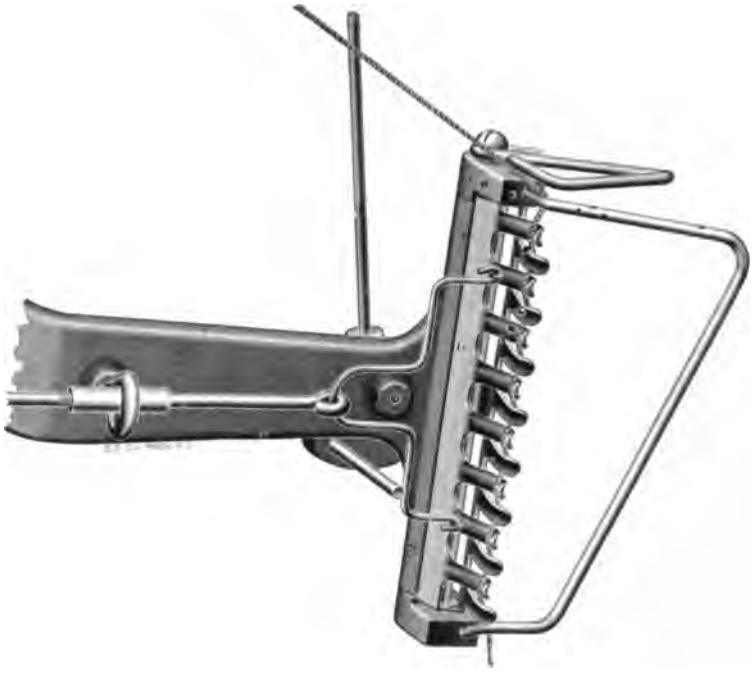

FIGURE 3.

ment of the same more than compensated for the defects in winding.

In drawing yarn on to a central tube or core by frictional contact with the surface of a revolving drum, the speed relation of the yarn to the tube is constant without regard to the diameter of the package. There is, however, a constant variation from start to finish in the speed rotation of the winding spindle, which, starting with a small diameter, is driven rapidly,—this speed decreasing as the mass increases in diameter. At the beginning of the operation of drum winding, the tube will be rotated at such speed in relation to the speed of the yarn guide, that three to five coils will be laid upon the core for each traverse of the guide, the result being a fairly compact mass in a package of small diameter, but as the yarn guide speed is constant and the rotation of the winding spindle variable, being constantly reduced in speed as the mass increases in diameter, the result is that the yarn is laid in more open coils, the crossings between the ends of traverse being less frequent and the density of the package constantly decreasing. The change of the angle of the coils also results in an increasing slippage of the yarn at each end of the traverse, which has the effect on soft yarns of adding to the twist at one end of the traverse and reducing the twist at the other. As the yarn guide is placed some distance from the winding spindle, the sway of the yarn allows the coils to assume irregular positions, and to frequently override at the ends of traverse, forming loops or cobwebs on the ends of the package.

In his invention of the "Universal" system of winding, S. W. WARDWELL departed entirely from all precedents and proposed to lay the fibre in such unvarying relation that the density of a mass wound by his system should be determined by the specific gravity of the material. This he accomplished by winding yarn around a central core in helical coils, the number of coils between the ends of the traverse being adapted to the diameter of the winding spindle and the length of traverse. These helical coils turn with an abrupt bend at the end of the traverse and

returning, cross the preceding coils, the yarn at each end of the traverse being carried over the preceding coil and laid parallel and in close contact with it during the reverse movement of the guide, the repetition of this process being continued until a complete layer of coils surrounds the central tube, every coil being in perfect alignment, crossing and recrossing between the ends of the traverse, thus tying down and binding with every coil all those which preceded it, and forming a solid, compact foundation built with absolute uniformity. As very little tension is required in winding by this method, the fibre retains its original form and elasticity, and can be drawn from the surface of the mass for delivery to its ultimate use without tangling or kinking.

In the construction of machines for putting into practice the Universal system of winding, WARDWELL adopted positive instead of inductive conditions for the control of the yarn. In Universal winding machines the speed relation of the winding spindle and yarn guide is constant, thus insuring an exact number of coils in each layer of the winding from start to finish. By the interposition of adjustable mechanism—such as an expansion pulley—between the winding spindle and the yarn guide actuating parts, the spindle has imparted to it a slight acceleration of movement, so that when the guide reaches its extreme position at the end of the traverse, the spindle will have rotated slightly beyond the position it occupied at the time of the previous reversal of the guide movement. In practice this mechanism is adjusted to impart a gain to the winding spindle equal to the diameter of the yarn being wound, thus causing the yarn to be carried over and across the previously laid coil, and to lie parallel to and in close contact with the preceding coil during the reverse movement of the guide. By a proper adjustment of this "gainer" mechanism, the finest yarn and coarsest cord alike can be wound with equal precision on the same machine.

The winding spindles are driven positively, causing a gradual increase of the delivery speed of the yarn to the spindle as the cop or cone increases in diameter.

One of the most if not the most important point to be considered in yarn winding, is that of properly applying tension during the process to avoid abrasion of the yarn and the impairing of its elasticity by uneven or excessive strain. All forms of tension devices which interpose a fixed condition between the winding guide and the yarn supply are defective in principle and operation. The most common form of positive frictional tension in use is a felt or cloth pad over which the yarn is drawn to the winding spindle. Any resistance to the free delivery of the yarn from the supply, such as would be caused by over-riding of coils in a badly wound cop or bobbin, is magnified many times at the tension pad, resulting in undue stress and frequent breakages of the yarn. The rough pad abrades the surface of the yarn and disturbs the twist, especially on soft yarn, where it pushes back the twist, causing it to accumulate at varying intervals, making the yarn uneven and creating alternate hard and soft places. It also collects lint and dirt which is caught up on the yarn, forming loose slubs or bunches. Machines supplied with this tension are commonly used for a wide range of yarn, all subjected to the same amount of frictional contact with the pad, without reference to the size or twist of the yarn.

The Universal tension consists of a series of interlocking steel fingers with polished oval surfaces, between which the yarn is drawn on its way to the guides. These fingers press alternately on the yarn to deflect it from a straight line, and cause it to be delivered with absolute uniformity to the winding spindle. The pressure of the fingers can be adjusted to all sizes and qualities of fibre, from the finest silk to coarse, heavy twine. By means of connecting mechanism between the thread guide and the tension, the pressure is automatically reduced as the speed traverse of the yarns increases in building up a mass of yarn upon the winding spindle. The rapid traverse of the yarn through the tension causes it to act as a yarn cleaner, throwing off specks, dirt, and loose slubs, thereby improving the quality of the yarn. Any unusual resistance to the free traverse of the yarn caused by irregular cop winding or by knots or bunches in the yarn, is not

multiplied by this tension, as the blades offer a yielding resistance, the tension opening to compensate for the added stress.

The limit of speed for delivery of a soft spun yarn to a winding spindle under proper conditions has never been determined, but as illustrating high speed winding, your attention is called to a sample of No. 6½ soft spun backing yarn wound at a speed of 1735 ft. per minute on the exterior of the cone. An examination of this sample will show that the yarn has not been impaired in elasticity or strength.

While an adjustable tension is essential to the proper handling of all kinds of fibre, it is absolutely indispensable in maintaining the integrity and elasticity of soft twist yarns delivered at high speed. It is also an important factor in winding fine yarns in multiple form for twisting, as the uniformity of tension on the different yarns equalizes the twist and retains in the highest degree the strength of the yarns. The economy as well as the utility of delivering yarn to a twister spindle from one "Universal" supply is very marked, the efficiency of the twister being increased and the cost and repairs of spools being dispensed with. Instead of each yarn rotating a spool under varying strains, all the yarns unite to rotate one light tube without flanges. This reduces the strain to a minimum, and insures absolute uniformity of presentation to the twister spindle. In the winding of yarn for the various transfer processes in mills as well as for shipment, the advantages resulting from the economy of space are very great in addition to those derived from the preservation of the fibre, and its proper delivery for use. This economy is shown especially in weaving, where the quantity of yarn carried by a shuttle is increased a hundred fold, resulting in additional efficiency of the loom and improvement in the fabric.

An eminent statist has expressed the opinion that profit in manufacturing processes in the future will come from saving what hitherto has been wasted. True as this undoubtedly is in its general application, it is especially true that the most terrible waste known in our methods comes from needless destruction of

forest growth. The destruction of hard wood trees used in the manufacture of spools and bobbins alone is something enormous. The elimination of bobbins and spools from mill use, and the saving of more than one-third of the packing cases required for shipping the yarn product of this country, is worthy of the careful consideration of the textile industry.

High spindle speed, as embodied in Universal machines, combined with ease of operation and condensation of product, resulting in economy of floor space, power, labor cost, waste, storage, packing cases, and freight, may be used as an illustration of one of the many ways in which manufacturing profits are to be derived in the future from the saving of what has hitherto been wasted.

The PRESIDENT. Gentlemen, we have one paper more, and while the hour is getting a little late, it will leave too much for us tomorrow unless we can remain and complete the programme. There being no objection, we will continue. The subject is, Yarn Testing and Testing Machines, by GEORGE R. SMITH, of Ossett, near Leeds, Eng. Is Mr. SMITH here?

The SECRETARY. Mr. SMITH is on the other side of the ocean and I will read his paper for him.

YARN TESTING AND TESTING MACHINES.

GEORGE R. SMITH, Ossett, near Leeds, England.

The subject of testing the strength of materials in the textile industry is not quite a new one. Tests have been and are applied by the government to cloth for the army and navy. The results of these tests have not always been satisfactory to the people concerned on account of the errors which are liable to creep in owing to the present method of testing. The sources of these errors will be set forth in a description of a new form of testing machine.

The first part of this article deals with the strength of threads, because, for the manufacturer to know the strength of the cloth he desires to make from any mixture of raw material he must first ascertain the strength of the thread he can produce from the same.

There is no reason why he should not be able to foretell with reasonable accuracy the strength of a thread made from any mixture of textile materials and from the strength of this thread be able to determine the strength of the cloth he intends to make.

Under the present conditions of working the blend maker requires a large number of years of experience as well as considerable ability to be able to mentally gauge the strength of the yarn he intends to make from the mixture of materials he is considering. He may have been making blends out of which some workmen would produce a thread ten per cent. stronger than that he himself may have produced. His own workmen may at times produce threads of exceptional strength from

blends which at other times only yield threads of medium strength. There may be many reasons for such a variation in strength of the spun material which are not due to the variation in quality of the raw stock but entirely to the skill exercised and the working condition of the machinery.

With a systematic method of testing and recording the results, as suggested below, the blend maker would know from day to day how near or how far each blend was from yielding the results expected from it.

With such a collection of reliable data about blends, the blend maker would soon know what effect an alteration in one of the elements of a blend would produce. The high value of such knowledge cannot easily be gauged, for nowhere does such definite knowledge exist.

Now suppose such a system to be installed in works and that there are no young members of the firm to take it up. A youth might be obtained who would make it his duty to glean and record all the information required to fill the table given below. He would present from day to day his average readings in the form of a curve or tables, so that the fluctuation of the efficiency of the process of manufacture might be seen at a glance. If such supervision was thought unnecessary he would take the average of his daily observations and enter them in such a form that the blend maker might easily compare his blends and the results obtained from them. With the exception of Col. III., this table will serve for cotton and worsted, while the whole table is suitable for the woollen industry.

Date of Month.	Name and No. of Blend. No. of Machine.	Counts.		Breaking Load.	Stretched on 60″	Diameter.		Untwist per Inch.	Weight Efficiency.	Remarks.
		Carded.	Spun.			Free.	Loaded			
Averages.										

Before proceeding to consider the value or the utility of the data named in the above table it will be well to examine the machine on which this data is to be obtained.

Figure I represents an elevation and Figure II a plan of the working parts of a machine for testing the strength, strain, twist, shrinkage due to twist on a thread sixty inches long, and the relative quantities of material required to produce a twist thread.

Before commencing a test, balance the beam which turns about knife edges *X*, by means of the large balance weight *Y*, and give the final adjustment by means of the small weight *Z*. Now that the beam is balanced its weight may be considered to be eliminated.

Fix one end of the thread to be tested under the jaw *A*, over the edge *B* and over the peg seen when the jaw *C* is open. A small clip is now fixed to the loose end of the thread hanging through the jaw *C* while it is at zero on the scale *I*. This clip is to produce the same initial tension on all threads, so that the diameter, stretch, and twist in threads are always measured under the same conditions. Now close the jaw, remove the initial tension weight and the thread is ready to undergo the test.

To start the test permit the beam to swing freely on its knife edges and start the clock work motor by means of which the jaw *C* is drawn back from its zero position by means of the screw *D*. As the thread does not stretch without load on it, the load beam is tipped by the pull in the thread under tension. The left hand end of the beam moves up ever so little, carrying with it the pad *E* which covers the end of the pipe *F*. Water now flows from the pipe *F* into the bowl *G*, down the tube *H* into the graduated vessel. The water presses down the long end of the beam and produces a stress in the thread which strains it a little. This lengthening of the threads allows the left hand end of the lever to fall, consequently the pad *E* covers the nozzle and prevents further flow of water into the graduated vessel.

As the motor *M* is drawing back the jaw *C* at a constant rate, the beam tends to tip and slightly reduce the pressure at the

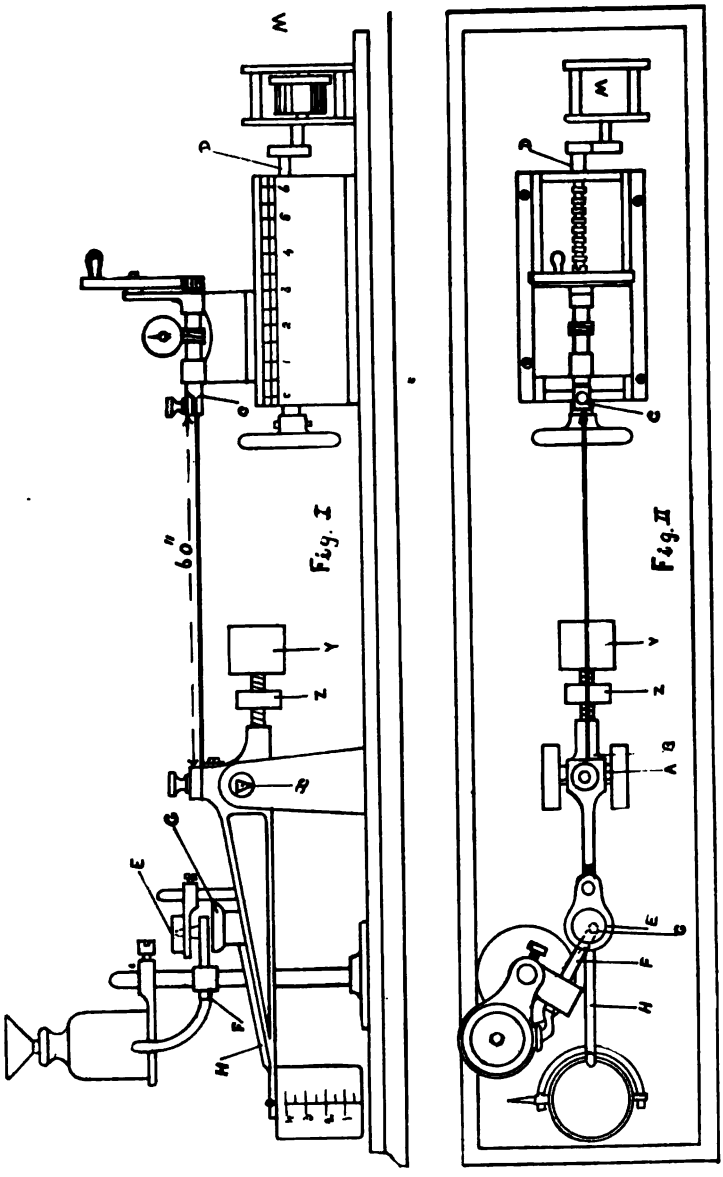
M
D
O
60"
Y
Z
A
B
C
E
F
H
Fig. I
Fig. II

end of the water pipe, the water runs into the graduated vessel until the load thus applied stretches the threads again, and so the operation goes on until the thread breaks. The experimenter then stops the motor and reads off on the scale *I* the amount that the thread has stretched to the nearest one hundredth of an inch. As before mentioned, the load is applied to the thread by running water into the graduated vessel at the end of the lever. The graduated measure shows the number of ounces or grams of water run into the measure, but the amount so read off does not indicate the load on the thread but only one-tenth of the load, because the beam is made to magnify the load shown in the graduated measure ten times. Though the beam appears straight, it is really a bell-crank lever as shown by the dotted lines in Figure III. The arm *C A* is ten times the length of the arm *A B*, consequently one ounce at *C* is equivalent to ten ounces at *B* and for the same reason the movement of the point *B* or a point *X* in the thread by one-tenth of an inch, would cause the point *C* to move one inch. This circumstance is taken advantage of to measure the skrinkage of a thread due to the twist put into it, or absorption of moisture. The amount a thread will stretch before it breaks is generally taken to indicate the high quality and holding power between the fibres composing the thread, while the load it will bear is considered to indicate the quality of the material of which it is composed, as well as the evenness of the thread.

The diameter of the thread may seem unimportant, but it is really necessary, and is valuable information when considered in conjunction with the counts of the yarn, for at the same time that it indicates bulkiness of the thread it, to some extent indicates quality due to manufacturing operations. Without such measurements it would not be easy to make an absolute record of any important alterations of one of the elements of a blend, or increased or decreased foodiness or bulk of the thread due to superior skill in the manufacturing processes.

At the same time that the strength and stretch of the thread is measured it is seen magnified about twenty times through the

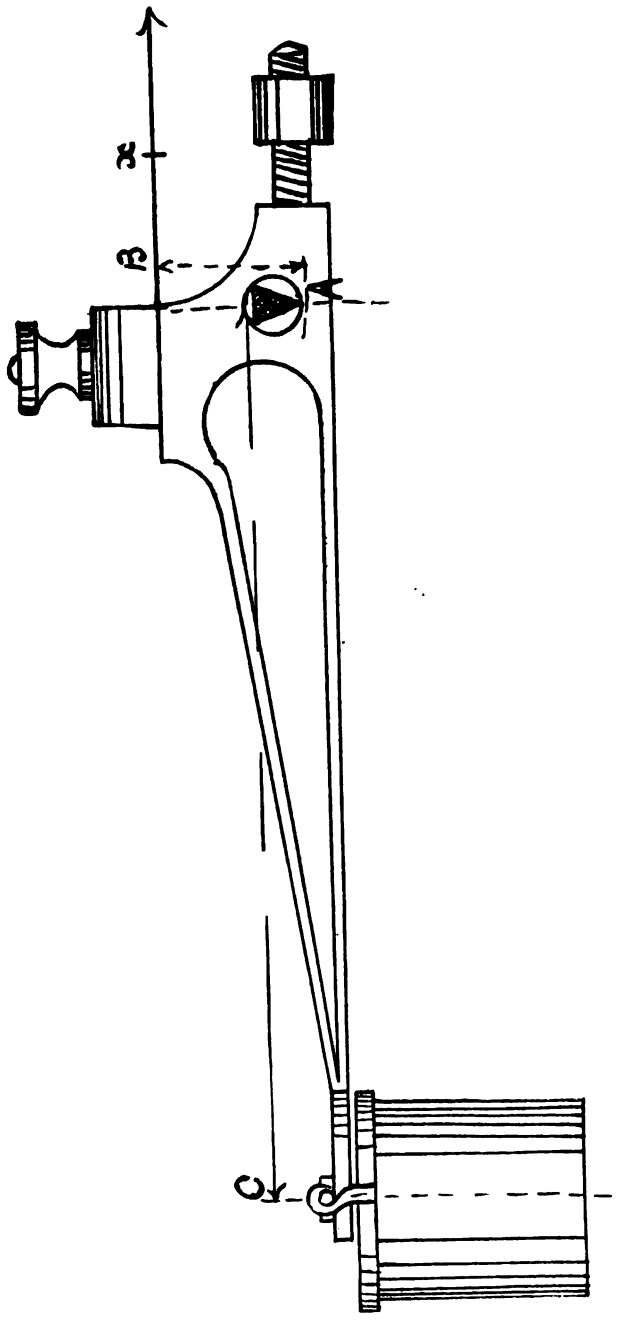

FIGURE III.

microscope as it appears to lie across the glass scale in the eye-piece. Now the diameter of a thread depends upon five factors, viz.: thickness of the fibres of which it is made, the number of fibres, their axial arrangement, their natural elasticity with which they resist compression by the tension in the thread and the tension on it, the load stretching the thread and the twist which forces the fibres together. The effect of each of these factors can be observed through the microscope. A person with a memory for form would quickly detect a change in the diameter of the thread due to an alteration in the thickness of the fibres, their number or axial arrangement, consequently he could find the cause of bulkiness of a thread, because in the first instance he would observe all threads under the same tension, and as near as he chose having the same amount of twist. This power of analyzing threads should prove useful not only in connection with everyday processes of manufacture, but by providing means for tracing some of those obscure causes of faulty cloths.

The tension in a thread is a very important factor in connection with its diameter. Threads which are bulky when not under tension and draw into small threads when loaded, are made of elastic material. Consequently, if the diameter of the thread is measured when it is loaded with the initial tension weights only, and again when loaded to such an extent that the thread has stretched 50 per cent. of what it will stretch, this reduction in diameter may be used as a measure of its natural elasticity. The twist in the thread is found by taking out the twist by rotating the jaw *C*. One revolution of the wheel *L* represents two turns per inch while another wheel not shown indicates the turns per inch in the thread. Now the number of turns per inch in a thread is not only important in judging the elastic quality of the thread, but it is desirable when wishing to produce the same character of thread with reference to its strength and stretch.

In the last column but one of the table given above will be observed a term called weight efficiency. This weight efficiency is a term used in this table to indicate how much per cent. of the original blend of raw material has been converted into spun

thread. This term can only be found when each blend is finished. It is a very important term because it shows to some extent the skill and attention exercised in the manufacturing operations. This efficiency would be found by dividing the weights in pounds of the spun thread in the grease by the weight in pounds of the blend unworked in the grease. If this answer be multiplied by 100 the efficiency will be expressed as a per cent. of the original weights. The last column is for remarks on the appearance of the thread that the experimenter may deem desirable to record.

The advantage accruing from testing the strength of materials has hitherto been considered only with reference to the blend maker. He is not the only man who should test to obtain information. The foremen who have the responsibility of making good threads should test to discover what effect each alteration produces, and out of such a store of information obtained find what are the best conditions for producing excellent work.

No doubt many clever and skillful workmen will scout the idea of supplementing their excellent judgment by what may be termed a mechanical aid. However, to those less biased, this method of obtaining information and confirming their judgment is worth the trouble required to obtain it. What warp spinner can say so far as his unaided judgment will permit that he has the correct amount of twist in his thread to yield a maximum of strength, at the same time that the thread yields the other qualities desired. It is not an uncommon thing for dealers in warps to order the number of turns per inch that are to be put into a particular class of warps. Then why should they not require the warp to reach a given standard of strength?

A thoughtful and clever spinner would make it his duty to test a thread or two on starting a frame, and while the thread is in the twisting machine, increase or decrease the twist to ascertain what effect it has upon the strength and appearance of the thread. A stock of such private notes, with the experience

gained by obtaining them, should enrich the judgment and thus enable a man to produce better work.

The cotton spinner is much akin by the nature of his work and processes to the woollen and the worsted spinner and out of remarks on these branches of spinning he will find what applies to himself.

The woollen mule is a beautiful piece of machinery, not entirely on account of the evolutions it will perform, but partly on account of the fine adjustment and the number of alterations that can be made in it to produce different effects. At present it is not known to what extent each alteration effects the strength and quality of the thread, nor does the spinner know how much smaller he can draw his thread than what it is carded to in order that the best thread possible may be got out of the carding.

For each class of material there must be a limit to which the material can be reduced in thickness by drawing in the mule to yield the best possible results. As to what this limit is, the spinner can find only by experiments and by testing the strength of the spun thread before and after the alteration. It frequently happens that a blend spins badly when, if not drawn quite so hard, it might spin well. The question naturally arises how does this hard drawing effect the strength, does the increase in the strength or appearance of the thread compensate for the waste and loss in output caused by hard drawing?

This question cannot be answered in a general way, because the character of the blends varies so much as well as the nature of the carded thread. However, each spinner can find out for himself by frequent testing, before and after each alteration what is the best course for him to adopt.

It frequently happens that in the manufacture of cloth for ready made suits two threads are twisted together to produce one strong enough to bear the stress put upon it during the weaving of the cloth. It frequently happens that one of these threads is cotton. In the higher class of cloths such as the West-of-England cloths or Scotch Tweeds, this cotton thread is

replaced by a silk one, but in these cases it is chiefly for effects in the woven fabric as well as for strength.

Now rules are given in class text books for finding the resulting counts of two or more threads when twisted together. These rules are very good for academical purposes, but for works they are not so complete as desirable as will be seen from a little consideration of the following rule. To find the resulting counts of a thread produced by twisting two threads together of known counts, "Multiply the counts of one thread by the counts of the other thread and divide this product by the sum of the counts." It will be observed that no notice whatever is taken of the amount of twist put into the threads to bind them together, nor is their relative rigidity or diameter considered. Now it must be clear to all that the greater the number of turns per inch, the lower will be the counts, because there will be a greater length of yarn per inch. Again, if one thread is hard and stiff while the other is soft, the soft thread will easily bend round the stiff one and a greater length of the soft threads will be required than the hard one. If the diameters are unequal and their counts the same, different lengths of each yarn will be required. The relative length of yarns in a twist thread is an important factor when the cost of the yarn is considered, and so is the twist when the strength is considered. There are no doubt general laws which might be applied to each of the above cases, but at present nobody knows them, because, hitherto, no apparatus has existed by which these laws could be discovered.

These general laws do not interest and are not of great practical value to the twister of yarns that special rules are which apply to his own particular class of work. By repeated testing under different conditions and with different classes of material the twister would quickly learn the practical rules underlying his work and thus be able to find, by a mental calculation or by actual experiment, what counts such and such material would produce or be required to yield a twist thread of given counts.

The subject of testing the strength of textile materials should be of special interest to dyers, bleachers and mercerizers, as

these machines were designed to meet the requirements of the managing director, Mr. HENRY GRANDAGE, of Low Royal Dye Works, Bradford, to be used in connection with the bleaching, dyeing and mercerizing industry. How to make the fine measurements necessary for this kind of work was a difficulty, but it has now been surmounted in such a manner that an exceedingly small alteration in strength, or change in character of the thread can now be recorded with absolute accuracy on this yarn-testing machine.

Figure IV represents this machine described in Figures I and II, as adapted for research work on bleaching, mercerizing, dyeing and drying in these works. Among the many things it is desirable to know in connection with the mercerizing of cotton (which can be found by using this machine) are the exact effects of time, tension on the thread, twist in the thread, strength of alkali, and drying under various amounts of tension. In connection with dying and bleaching there is the question of tendering. All these questions are of great importance to those who would lead in these branches of industry.

A in Figure IV is a stand for supporting a semicircular trough *B*, which is covered with a glass plate, *C*. At one end is a pair of pulleys clamped to the end of the tube as shown. In the other end is a cork through which is passed a glass tube with a hole a little larger than the platinum wire hook which goes through it. The hook *X* is coupled to the beam by a fine wire *D*. The length of thread under treatment and test is preferably 30 inches, while that portion going over the pulleys is thick silk, so that all the stretch recorded comes from the material under test. Having got the thread fixed in the trough *B*, which is at present empty, take out or put in twist (if an alteration in the amount of twist is required) while the thread is slack. Now set the sliding head *F* so that the pull in the thread just makes the balanced beam *G* float. The test may now start by filling the trough *B* with bleaching liquid or alkali from the bottle *H*. When the alkali reaches the level of the small tube *V* it begins to run out of the trough in drops as shown. If the liquid is now

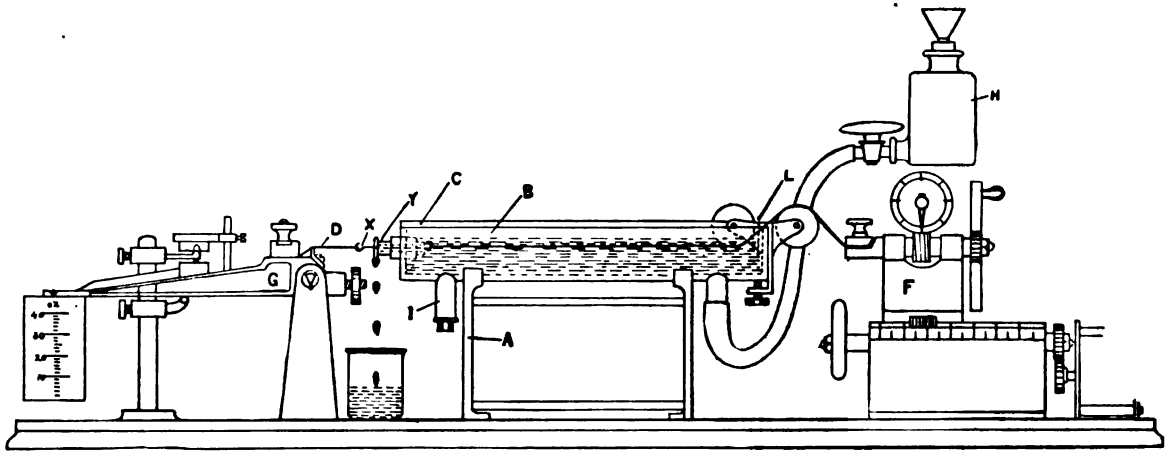

FIGURE IV.

allowed to run a little quicker into the trough, the tube and material becomes well covered with liquid. When the thread has been under treatment long enough, place the bottle *H* at a lower level than the trough and the liquid will run back into the bottle. If it is to be tested when dry, couple the tube *I* with some source of air at the required temperature it is proposed to dry at and pass this air over the thread until it is quite dry. A thermometer placed at the outlet by the pulleys *L* will record the temperature of the air surrounding the thread. When absolutely dry the test can be made. Absolute dryness is desired so that the test can be repeated under the same conditions. It should be observed that the thread may be under any amount of tension while in the liquid or during drying.

The microscope for measuring and examining the thread is not shown in this drawing, but it is mounted on a pair of rails so that it may be slid the whole 60 inches over the trough and thread. Very little has been done in the shape of research work in the spinning branch of the textile industry, whereas in each of the many branches of this great industry the field seems almost boundless. What progress has been made seems to come almost entirely from inventors, and makers of textile machinery. This is a lamentable state of things, considering to what extent other industries have benefited by scientific research.

What little research work has been done on fibres and threads has been done by Dr. BOWMAN and recorded in his book on the wool fibre. In order that this good work may be continued under the most favorable conditions for observing effects, the machine which is shown in part in Figure V has been designed. This form of machine is suitable for wool fibres and short threads. The extensions on the fibre or thread under test are magnified one hundred times and the extension on the same can be read to the thousandth part of an inch. This is done by forcing water from under the piston *A* into the the pipe *B* which is marked in inches and tenths of an inch. The weight or load is applied to the thread in the manner described .above. The

vessel *C* at the end of the beam is small in diameter and long to obtain fine readings of the quantity of water it contains.

To make a test with this machine, first balance the beam *D* by means of the weight *E* while the water tap *F* is closed. Now fix the fibre in the jaws *G* and *H*, providing *H* is high enough. If it is not high enough throw the clock motor *I* out of gear and raise it by means of the hand wheel *K*. By means of the thumb screw *L* put sufficient tension on the fibre to just make the beam float. Now observe the height of the water in *B* and begin the test by starting the clock motor *I* and opening the tap *F*. The water depresses the piston by turning the bevel wheel which is screwed on the inside. This depression of the piston and head *H* causes the fibre to stretch, because the beam remains stationary, which is due to the load at one end being equal to the pull at the other or short end of the lever.

If the material stretches much the water in *B* will quickly rise to the top of the tube. When it has done so, stop the motor and quickly draw down the water level in the tube *B* to the point *O* by means of the tap *M*, then let the test go forward until the water level reaches the top of the tube again. Draw the water level down once more and again proceed with the test. When the fibre has broken, add the number of inches together that the surface of the water in *B* falls through, and this represents the number of one-hundredths of an inch the fibre has stretched. Only one-tenth of the load required to break the thread is shown in the vessel *C* in ounces.

The microscope attachment is not shown, but it merely consists of an arrangement for making this instrument slide vertically over the length of the thread or fibre under test. Figure VI shows a special attachment and consists of a tube surrounding the thread so that the thread may be immersed in air or liquids at any temperature.

A is a nut working on the screw *B*. This nut is surrounded by an elastic band *C* which enables a good fit to be made between the tube *D* and the nut *A*. *E* is a tube by which air or a liquid

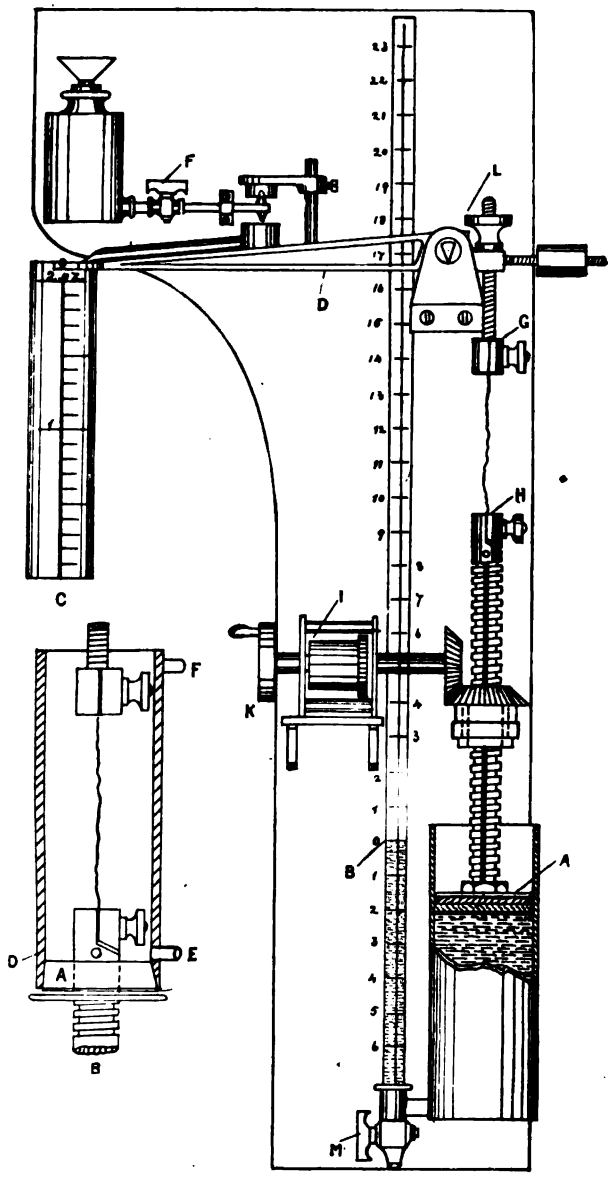

FIGURE VI. FIGURE V.

can be admitted to envelop the fibre or thread while *F* is an exit for a liquid when one is used.

To use this attachment cause the nut and tube to slide down the screw thread so that the fibre can be fixed in the jaw standing out of the tube. Fix the other end of the fibre in the top jaw, and rotate the tube until it slides up and covers both jaws. The test may be then carried out as described above.

It is well known among textile people that the cloth purchased by the government for the army and navy must reach a minimum standard of strength. This is one of the best means that can be adopted for keeping up its quality and at the same time allowing individual manufacturers liberty to obtain this strength either by a high quality of material and inferior skill or by using superior skill and a rather lower quality of material. It is a known fact that superior skill alone in the scribbling and spinning department will frequently increase the value of a thread by ten per cent. of its original value and this increase in value of the thread does not represent the total gain to the manufacturer. The buying and selling of cloth partly on the strength test as carried out at present by the government is not always satisfactory to the parties concerned because of the unreliability of the present method of testing. As an example of the want of confidence in the present method of testing the strength of cloths, the following remarks may be of interest as they were told me by a most trustworthy manufacturer. He said, "I sent three pieces of cloth to three different places to be tested, I expected them to yield about the same results, but found them to differ so much that none of them could be relied upon." I have myself watched an experienced experimenter obtain by testing, as inexperienced people might test cloth, results which varied fifteen per cent. Such a possible variation in any testing machine renders it valueless.

Now this machine is designed to prevent the experimenter from obtaining other than correct results when testing the same cloth, either at the same or widely different times. As will be seen it is a gravity and not a spring machine, consequently it is

independent of a variation in temperature, and is not liable to deteriorate at the same rate as a spring machine. While friction is reduced to such a small amount that it may be said to be frictionless in the weighing mechanism. In respect to capacity it is very unlike the spring form of testing machine as it will test with superior accuracy any textile material, whether it requires a pull of five pounds or six hundred pounds weight to break the material under test. The machine shown in Figure VII is suitable for testing either hanks of cotton or worsted, or cloth from six to thirty-six inches long. This patent form of holding the hank possesses one great advantage, viz.: each thread in the hank is under the same amount of tension during the test, because the threads are not on the top of each other. Consequently there is no tendency for a hank to break down a thread at a time.

A is a jaw of the machine suspended from the pillars *B* by the links *C*. This jaw is connected to the beam where the load is applied by means of the link *D*. The beam is carried on conical bearings *E*. *F* is a weight which is driven along the beam by the suspended weight *G* whenever the catch wheel *X* will permit it to do so by the end of the beam tilting up so that it can miss the stop *H*. *I* is another jaw which slides easily along the rods *J* so as to accomodate specimens of any length. This jaw can be clamped to the rods by means of the set screws passing through the split bosses *K*. The yoke *L* is fixed to the rods *J* which is drawn back by the screw *O*. This screw is driven by the spur wheel *P* and worm wheel *R* from the motor *W*. *V* is a scale for measuring the stretch of the material to the nearest one-hundredth part of an inch, and *T* is a scale on the beam for measuring the pounds and the fractions of a pound of load applied, while each weight at *Z* represents a load of one hundred pounds weight on the specimen.

To carry out a test fix the cloth in the nip of the jaw *A*. Reverse the direction of the running of the motor so that the rods *J* and the jaw *I* are carried to the left by the screw *O* working in the yoke *L*. When this yoke *L* has travelled to the

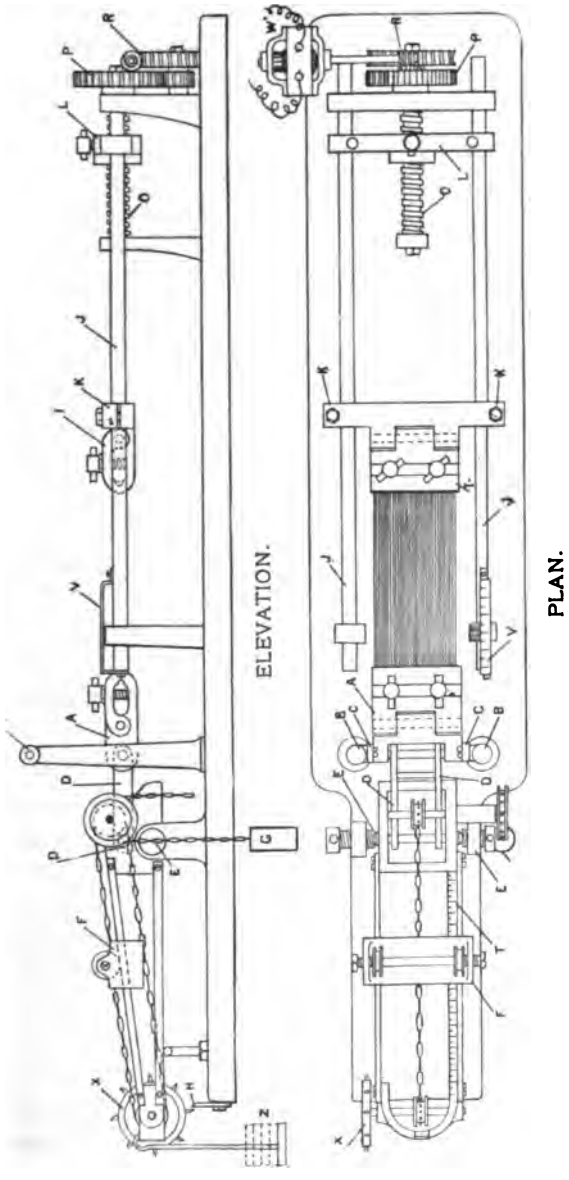

FIGURE VII.

end of the screw the two jaws may be six inches apart and the scale *V* at its zero position. If the jaws are not six inches apart, slacken the set screws in the split bosses *K* and push the jaw *I* to the left until they are six inches apart. Now fix the jaw on these rods by tightening up the screws. Clamp the other end of the cloth between the jaws *I*, see that the beam floats freely when it is unloaded, read the position of the scale, and the trial is ready to commence. Start the motor in the right direction and note from time to time as the test proceeds how much the material has stretched for every addition of a few pounds of load up to the time the material breaks.

From these results the stretch and the breaking strength will be seen, also at what load the material ceased to give equal extensions for equal loads applied. This is perhaps the highest test of the quality of a cloth that can be applied.

A worsted or cotton hank of yarn is tested in a similar manner, but the fixing of the hank in the same jaws is performed differently. The hank to be tested is spread evenly by means of a comb over a vulcanite rod, seven inches long. This rod is then placed in the jaw *A* and the jaw closed but not nipped tight. The other end of the hank is similarly on a vulcanite rod and laid in the partially closed jaw *I*.

The material is now put under tension which pulls the rods into the recesses made for them in the jaws as shown. The jaws are now firmly closed, then the load is taken off the beam, and the jaw run back until the beam floats. Read the scale *V* and start the test as described for cloth.

This machine is shown driven by an electric motor; however, it need not be so driven where hand driving or even shaft power driving is preferred.

The machine shown in Figure VII is suitable for great as well as small load to break the specimen under test. Where specimens do not require more than 500 or 600 lbs. of load to break them, the cheaper form of beam shown in Figure VIII takes the place of the beam shown in Figure VII. The parts lettered *D* and *E* correspond in both figures. The drawings in Figure VIII

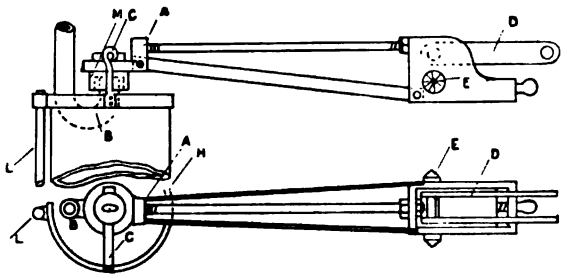

FIGURE VIII.

represent a plan and elevation of the beam. *H* is a graduated vessel suspended from the arm *C* which is fixed on the end of the beam *A*. When the pull on the arm *D*, to which the jaw *A* is fixed, makes the end *A* of the beam to tilt up, the end of the pipe *B* is uncovered by the pad *M*, consequently water runs into the vessel until the specimen stretches and the end *A* closes the mouth of the pipe again. So the operation goes on until the specimen breaks. Do not imagine that the end *A* of the beam is constantly dancing up and down. Its rate of movement is so small that it appears at rest. The load on the specimen under test is read off on the graduated tube *L*.

The PRESIDENT. As this concludes our programme for the evening, I will declare the session adjourned.

FOURTH SESSION.

THURSDAY AFTERNOON, OCTOBER 18, 1900.

The Association met in the banquet hall of the Arlington Hotel at 2.30 P. M., President THOMPSON in the chair.

The following paper was read:

MARKETS FOR AMERICAN GOODS.

D. A. TOMPKINS, Charlotte, N. C.

Mr. President and gentlemen, all this matter that I have here [referring to a pile of manuscript] is not as formidable as it looks. It was not prepared by me; it was prepared by Mr. MAURICE L. JACOBSON of the Bureau of Statistics of the United States Government. You need not, therefore, look for me to be attacked on account of anything contained in these papers, but if there is any virtue or faults in them, you can give the credit or the discredit to another man.

You have all been invited by the Southern Railway to go on a trip South, and I have at my lunch today had a taste of a sort of preliminary invitation from a representative of the Southern Railway, and if you get out as well as I did in this matter I think you will be pleased with the trip.

In these periodic meetings the purpose of the members of the New England Cotton Manufacturers' Association, of whom I have the honor to be one, is to undertake to develop something for the advantage of the members that is not inconsistent with the general interests of the United States and not inconsistent with the interests of any part of the people of the United States. That being the case, we naturally want to give our attention to principles,— principles that relate to manufactures, principles that relate to commerce, principles that relate to finance, and above all things, not to politics, because in these we are liable to get into controversy immediately, whereas on these other subjects, whether we are Democrat or Republican, whether we belong in New England or in the Carolinas, we can

get together upon the subject of fixed principles for the advancement of the people of both sections, and it is doubtful whether we ever could get together upon the subject of politics.

In speaking to you upon a question like this, which relates to the industrial development of the country, I want to take the liberty here to speak of the work that the president of this Association has done for the South. He was first of all to take the position, in direct opposition to the opinion of many distinguished New England people like Mr. EDWARD ATKINSON, that cotton could be manufactured in the South at all. Mr. THOMPSON was the first that I know to announce that proposition. He was the first to come South and spend his money to undertake to develop a large water power at Columbia. And there is a book which he wrote upon the subject of the Columbia Canal, showing his drawings, showing the deductions which he made from his surveys and his engineering work, and which book he promised to send me, but which he never did do, [laughter], which is invaluable as representing the beginning of the development of cotton manufacture in the Southern States. I know of no man who is more entitled to every tribute of respect from the Southern people than Mr. THOMPSON. I know no man who has done more to formulate the plans upon which the developments that have taken place could be developed than the president of your Association. If the time ever comes — probably some time after he is dead — that we begin to pay the proper tribute to the people who have done for the South more than all others in industrial development, there should be a monument to your president in Columbia, S. C. [Applause.]

In view, Mr. President and gentlemen, of this high estimation in which I hold your presiding officer, and as a southern Democrat, I may perhaps be excused for dissenting to some extent from some of his sentiments expressed in his inaugural speech here upon the subject of Republicanism and Democracy. If we go into the subject of making comparisons of the political parties one with the other, there is no end to the dissension that can come about. If it is a question whether Mr. BRYAN, the leader

of the Democratic party of today, is totally in error about his silver proposition, we have only to set against it that other financial reform which we had a few years ago, the Greenback movement, which was led by the distinguished Republican, BENJAMIN F. BUTLER, of Massachusetts. We do not agree with either one of those things. We who are concerned with the industrial interests of the South invite with earnest solicitation Republicans or Democrats, either, from New England to come South and live with us. And it is notable that every Republican who has ever come, with very few exceptions, has turned Democratic upon local issues in the South as soon as he became one of us. This is made easier because of the fact that he finds southern Democrats standing ready to vote for the Republican national candidate for President of the United States when principle so dictates. [Applause.]

In all that this Association does and attempts to do, there should be nothing political. We want it wiped out. We cannot legislate that greenbacks unsupported by anything more substantial than the paper on which the promise is written, can be made sound money. We cannot legislate that silver shall hold the relation to gold of 16 to 1, because that is a commercial proposition, and we cannot control it by legislation. We cannot legislate that an ignorant man in the North or South can be put into a position of postmaster of an important post office and made to occupy that position without regard to education or energy, just because he is black. You cannot do it whether he is white or black. We must devote in this Association, our attention to subjects that involve principles of manufacture, that involve economy of manufacture, that involve finding markets for the increased manufactures that we are constantly bringing about with American enterprise in New England, in Pennsylvania and in the Southern States alike. It is to this phase of the subject of American markets that I wish to address myself, and it is a phase of the subject in which the principles involved can be equally supported by Democrats and Republicans, by New Englander and Carolinian and by the people of the whole Union to the advantage of the Union.

We now manufacture in America, including Canada, not much more than one-quarter of the cotton produced in America — that is, in the United States. In order to continue the development of cotton manufactures throughout the Southern States, and in order that the manufacture in the New England States may also be extended and remain upon a profitable basis, we must find some means to extend our market. We have already reached that condition where the markets of the United States are not sufficient for the cotton goods that we already manufacture in certain lines. If we can so extend our markets that we can give to the Southern States and to other sections of the Union that manufacture ordinary goods, the markets necessary to take those goods in different parts of the world, then we may continue the development that up to the present time has been profitable and we may continue to manufacture cotton goods in New England under a protection for finer goods and keep a business profitable for the future that has been profitable in the past; and without these foreign markets, and without this system of protection to the improved qualities of goods, it will be quite impossible for us to any further extend our manufacturing interests.

One of the most important things in this connection is to determine just what we want for the purpose of developing new markets. We must tell our legislators in well formulated terms just exactly the measures that are necessary for them to undertake in order that we can get this foreign trade that we want. I am one of those who do not believe that the average legislator is indifferent to the interests of his constituents. I have always found that wherever a constituency is enabled to define exactly to a legislator what it wants, there is no class of people who take more interest and more trouble to get that thing done than the average congressman. It is important to determine and define what we want beforehand. I remember having heard of an incident of an applicant for a school — I have forgotten whether it was in the mountains of North Carolina, or in the mountains of Vermont; it doesn't make much difference which.

He was a person of immense self-conceit. The mountain school commissioners were very doubtful of their own abilities to interrogate him properly and find out whether he was a good school teacher or not, but they did the best they knew how. After a good many questions, one of the mountaineer commissioners came to the teacher with the inquiry; "I want to know, when you teach geography, do you teach it round or flat?" "Well," the teacher promptly answered, "I can teach it round or flat, the commissioners can just take their choice."

Well, in most of the propositions that we carry to Congress, we are in just about the shape those commissioners were. We really go there to complain of something and don't know what we want done to fix it, to rectify the trouble. We don't know whether we want the geography taught round or flat, and we have got first to make up our minds what we want, put it in a definite proposition and let business organizations like this get back of it and push it, and my opinion is that when we do this we will find that we can get everything we want. Not only congressmen, but the administration itself is usually anxious to do what the business interests of the country require if the business people will only define what they require.

In getting new markets the first prerequisite is to find out where they are and to what extent markets are in a certain section. Through Mr. O. P. AUSTIN, the chief of the Bureau of Statistics of the Treasury Department, and with the assistance of Professor MAURICE L. JACOBSON of that department, I have collated some figures here with reference to trade in different countries in common cotton goods and the percentage that we have got of that trade. I will take these sheets and for convenience will number them.

No. 1 is Chili. Leaving out the figures tabulated here by Professor JACOBSON and reading the recapitulation only:

The total imports of ordinary cotton goods into Chili is,	$4,213,330
Imports from the United States,	210,038
The percentage of that business done by the United States being about,	5 per cent.

I cannot see any reason why we should not do 50 or 60 or 75 per cent. of that business, as well as 5 per cent. of it. If this country as a great and national government will undertake to provide the necessary transportation facilities and other commercial facilities necessary to reach that trade with the same degree of perfection that the average country town does when it subcribes for a railroad to get into the market, why, we ought to get 50 and 60 and 75 per cent of that cotton trade.

The second sheet:

Cotton goods trade to Brazil,	$12,021,499
From the United Kingdom of Great Britain and Ireland, nearly	9,000,000
From Germany, nearly	2,000,000
From France,	1,000,000
From the United States,	587,202
Or a percentage of about	1.1 per cent.

We do not know anything about the Brazilian market at all. The English and German ships come to this country, get our cotton, take it to those countries, send the goods to Brazil, and sell them there to the exclusion of ours, simply because we are paying no attention whatever to those markets nor to the facilities to get to them.

Table number 3 is Argentina. The recapitulation of the various figures — and I want to incorporate these figures, with the permission of the Association, into my address in the printed volume, because they are very interesting:

Total cotton goods imported into Argentina,	$17,286,413
From the United States,	172,988
Amounting to only,	1 per cent.

For people that consider themselves enterprising, for people that consider that they know how to get transportation facilities to the market and get into the market as we have done in our domestic market, that result is simply disgraceful to all of us.

Table number 5 is China, a country that is very interesting to all of us. The recapitulation shows that:

The United Kingdom puts into China in a year cotton goods to the value of	$20,769,000
Next to England comes Japan,	12,054,000

This is a country that gets the bulk of all its cotton from the United States, takes it to Japan, manufactures it, turns it over to China — chiefly in the shape of yarns and not of cloth — and does the next largest business to Great Britain.

The United States does about	$9,844,565
The total import of cotton goods into China of the kind we manufacture in this country is	47,890,756
Of which the United States does	20.6 per cent.

Which is the best showing that we make in any country. And having accomplished the acquisition of that trade to the extent of 20 per cent. in value, we appreciate in a very high degree the influence that that trade has upon the cotton manufacturing business in this country. At the present time, owing to the Chinese war, the goods are blocked up in the various ports and the various warehouses and we have a most depressed condition of business, simply because we have lost the trade in one country in which we happen to have worked up a better business than in any other foreign country. If we had a proportionate trade in South America, a proportionate trade in South Africa, a proportionate trade in Australia — and all that these proportionate trades need is the facilities necessary to accomplish the bringing of these markets within our reach — we would not practically feel the loss of the Chinese market, and England practically does not feel it.

I have a sheet for Uruguay. The recapitulation is:

Total cotton goods imported,	$2,889,693
From the United States,	107,643
Or about	3.7 per cent.

All these markets are practically absolutely new markets for our goods; new simply because we have not given the slightest attention to their development, and new because the domestic

market of the United States under the influence of a protective tariff has been amply sufficient to make the manufacture of cotton goods amply profitable for whoever undertakes it with ordinary discretion in this country, without the necessity of finding foreign markets.

I have another sheet here, table number 4, Cape of Good Hope, South Africa.

In the Cape of Good Hope the total imports were,	$4,930,595
From the United States,	45,029
About	1 per cent.

And still another sheet, the Colony of Natal.

Total import of cotton goods,	$567,808
From the United States,	3,538
A little more than	½ of 1 per cent.

The Russian exports of cotton textiles (this is made out in terms of Russian money) amount to 11,912,000 rubles. They paid bounties to the extent of 477,000 rubles. Or in other words, Russia, instead of relying upon an import duty, a high tariff, is actually putting export bounties upon her cotton goods in order to develop her cotton trade. Now, if we could ever bring ourselves to that condition of mind in which we would be willing to pay some slight premium to extend our cotton goods business, there is no telling the extent to which we could put it. Without discussing it, simply discussing the question of providing the necessary facilities, I see no reason why, instead of manufacturing one-quarter of the cotton produced in this country and consuming it in manufactured shape, we should not manufacture the the whole of it and export the surplus in manufactured shape. You all know from previous discussions that I have had before this Association that I am one of those who do not believe in the principle of competition at home, who do not think there is anything in the proposition of the competition of New England and the South, but I am one who believes that there is ample opportunity to so develop our cotton trade that there will be more than the manufacturers of New England and the South

together can do, and more than profitable work for the working people of New England and the South. When we reflect upon the fact that there are between 10,000,000 and 12,000,000 bales of cotton made in the United States in one year, and that there is not up to the present time more than one-quarter of it manufactured, when we have the best and most intelligent labor in the world, when we have the raw material that is produced here at home, what is to keep us, if we provide the facilities to get these foreign markets, from developing our cotton manufacturing interests from 2,500,000 to 10,000,000 bales of cotton? And why should not our people have the benefit of it? Why should not our manufacturers and our laborers have the benefit of it?

Now, the question is, in what manner can we get together in a way to formulate a common proposition for legislation, for financial assistance, for commercial regulation, that will benefit us all alike? While I am a protectionist and always have been, I believe that there comes a time when we have got to supplement the principles of import duties in order to protect any trade. I was in the committee room of the Ways and Means Committee in Washington not more than two or three years ago, when the Dingley Bill was under consideration, and the subject of the duty on pig iron came up. There were some people who wanted the duty on pig iron raised about three dollars a ton, and one of the committee asked what I thought of it. I told him if the gentleman from Pennsylvania wanted the duty on pig iron raised from three dollars a ton up to thirty-five dollars a ton, by all means accommodate him; the time had come when pig iron was no longer coming into America; it was going out of it. If the manufacturer wanted protection, the thing to do was to give him shipping facilities, and then you might give him all the import duty he wanted — it didn't hurt the free traders or any one else. [Applause.]

Now, we all know that it is only a few years ago that the steel business in this country was in the condition of confusion worse than confounded. They had an association working under the

protective tariff to keep up the price of steel rails to a point of cost plus fair profit, plus the tariff. In order to keep them up to that price they had to form an association, distribute the production and agree to curtail the production down to what that would come to. They began by working eleven months, then they reduced it to ten months, then to nine months; then they got to calling each other liars and thieves, and this man was telling another that such a manufacturer had agreed to work his proportionate part and had exceeded it by many days, taking secret contracts; and finally some of the leading people in the steel business said, "We are going to pull out of this; we are going to run our steel works all the year round; we are going to sell our steel rails abroad at twenty dollars a ton, or twenty-four dollars, or twenty-five dollars, whatever we can get for them." Mr. CARNEGIE and the Pennsylvania Steel Company sent to England and they sold 100,000 tons of rails apiece. Since then there have been rails sold in China, Japan — all the world over; and since then the steel business has never been in a more prosperous condition. There isn't anybody in the steel business that is a liar today; they are all honorable gentlemen and they are making money.

Now, I conceive that what we ought to do in this cotton goods business is to agree upon policies for which we can come to Washington and work together, the New Englanders, the Pennsylvanians and the Carolinians. One of the first of all, whether we are protectionists — I mean protectionists in the sense of being tariff people — or whether we are free traders — I, myself, am a protectionist — is to make propositions that will lead to the development of further markets, and give us an outlet for the goods that we produce in excess of what this country wants. The principle to which I attach the most importance is that of reciprocity. We want to protect the markets of this country for the industries of this country which have not yet equalled those of Europe or of a few nations which exceed them. But for those countries to which we are superior in manufacture, we want to ask them to modify their tariff laws and we will

modify ours correspondingly, This is a proposition which was announced years ago by that distinguished American statesman, JAMES G. BLAINE. [Applause.] I believe in it. It is Democratic and it is Republican alike. The protection Democrat and the protection Republican can alike come here to Washington and urge the administration and urge Congress to give us a reciprocity treaty with Brazil, to give us a reciprocity treaty with Uruguay, with all these countries whose markets I have exhibited here in these papers, and extend our trade without doing one particle of injury to the principle of protecting the domestic market for our industries at home. The members of the Home Market Club themselves could belong to an organization to promote a principle of this kind.

Now, in this matter of protection there are many of us who stick to a principle that used to be applicable when it has ceased to be applicable. We get something ground into our bones that time should alter and which time does not very well alter in the case of human individuals. This question of seeking for new markets instead of relying upon import duties is one that many of us now realize who have in the past been protectionists — and I say many of us because I have always been a protection Democrat. There comes a time when import duties are no longer protection, when protection is simply a question of turning the tide of trade the other way and of getting other means of protection than import duties. I have cited the case already of pig iron and steel. There are locomotives, there is the business of lumber, there is the business of cotton oil and cotton seed meal; and in all these cases 200 or 300 or 500 per cent. of import duties would not do us a bit of good. Protection in that case means simply the facilities to get our product, in excess of what we consume in this country, to a foreign country. Next to the principle of reciprocity the thing that we most want, the thing that we are most deficient in, is shipping. We have not got the ships. We let England and Germany send ships here, subsidized, and take away our cotton at the cost price of cotton, and they take it home, give the wages to their

labor, give the profit to their manufacturers, give the trade in groceries and clothes and in shoes and hats to their people, and then take the goods to these very markets in which I have shown that we are an absolutely insignificant factor, while in many instances our people remain at home here without decent wages and our manufacturing establishments are shut down because we have an excess of goods. We talk about over-production. Now, we have the best domestic market in the world; everybody knows that. It is known all over the world. The market of the United States is a market of very large consumption. Why? Because we have the best transportation facilities in the world. We have built railroads, and railroads, and railroads, until every town and every city and every county has railroad facilities. We have subscribed money to pay for those roads. The government itself became responsible for the construction of some of the Pacific roads. Every state has voted bonds in support of some railroad; every county has subscribed for the stock or bonds of some railroad; every city and every town has subscribed for railroad construction. If there is an American town in the mountains, and it wants to get down into the world and deal with the world, they know the first thing they have got to do is to build a railroad, and they know they have got to pay for it. The liberality of cities and towns in voting bonds and taking stock has been so great that it has become necessary in many states to pass laws restricting cities and towns and counties in the amount of bonds they shall issue for a railroad. People know they cannot do business unless they get into the world and they cannot get into the world without a railroad.

I read some time ago two editorials about a column long in the same paper — it was a Democratic paper, I am sorry to say — which presented a curious contrast. One of these editorials was discussing the subject of a new railroad that was being built, which was laid out to run about four or five miles from the town, and it stated that for $50,000 the promoters of the road had offered to bring that road by that town; and the paper

abused the citizens, it abused the merchants, it abused the county and the corporation and everybody else because, for want of $50,000, that road should be allowed to go five miles away from that town. In the very next column there was another editorial discussing the subject of ship subsidies, and in the discussion of the proposition of subsidized ships to give us market facilities in foreign countries, in accordance with which that town would not have had five dollars to pay, they were vilifying the subject of subsidies as thievish and highly improper. In the one case they were abusing the town for not putting up $50,000 for a railroad, and in another they were abusing them for the possibility that they might have to put up five dollars for steamships to China. I cannot see the consistency. I cannot see that we can ever get transportation from this country to the markets that we want to acquire unless we bring ourselves to that degree of liberality that we are willing to pay for them as we are willing to pay for a railroad, unless we come to an appreciation of the value of foreign transportation approximately as we understand the value of domestic transportation.

Take the question of cotton spinning alone, and the Southern interest alone. Suppose that by means of $10,000,000 subsidies a year we can develop markets that would take the product of 1,000,000 bales of cotton more. Leaving out of consideration the present very high price of cotton, which is exceptional and it is going to go back in time — I do not think it will this year — and calling it six cents a pound, 1,000,000 bales would be worth about $30,000,000. Now, if we could manufacture that cotton into common goods and send it to these markets where it is exhibited in these tables that there is an opening — Brazil, Uruguay, China, Chili, and South Africa — we would get a return to this country of $100,000,000 instead of $30,000,000. We would get from these various places for cloth $100,000,000, whereas now we get $30,000,000 from England and Germany for the cotton. Well, suppose that it was necessary to pay $10,000,000 a year subsidies; in increasing the value of 1,000,000 bales of cotton from $30,000,000 to $100,000,000,

there is $70,000,000 of profit, and suppose we took off $10,000,000 for subsidies, there is still $60,000,000 profit for the people who make that into goods.

Now, that is a question of whether we have the labor and whether the conditions are favorable. It is not all profit to the manufacturer — do not let me give that impression — but it goes as wages to people who are now unoccupied. It goes to consume farm products that now perish and are not sold at all. It goes to make land more valuable because of the fact that farm products can be raised and sold to cotton manufacturing operatives at home, rather than letting the cotton go abroad and letting but the price for cotton come back.

I say that the Southern States alone could well afford to pay $10,000,000 annually as a subsidy to steamship lines to acquire one-half of these markets, provided the subsidy accomplished the purpose.

I am not in favor of voting subsidies to be taken up by existing corporations for doing business that they are now doing. That has been the objection in many cases to the Hanna-Payne bill for developing our shipping interests. But I am in favor of a bill which, over and above what shipping interests we have now, will develop a trade that will give us markets for cotton goods in excess of what we are now making. And if we keep on building mills we have got to have the markets, and if we do not get the markets, we have got to stop building mills.

I have read in the morning papers that the Chinese matter is likely to be settled by Russia's taking Manchuria and Germany being allowed to do as she pleases. I regret very much the prospect of Manchuria's going past the treaties that we now hold with China. The greatest part of American trade in China, this $20,000,000 worth which is so valuable to us, is in Manchuria. I certainly hope that this government, whether it is continued by McKINLEY or whether BRYAN is elected, will see to it that American interests in Manchuria are fully protected, that if Russia gets it she will get it upon the condition that we are to

trade there in the future as we have in the past, and that all our interests will be taken care of by this government.

I had some talk a day or two ago with a member of the Nicaragua Canal Commission. I was very much gratified to hear from him that up to the present time the commission had not discovered any obstacle in the way of a canal across the isthmus or one of the isthmuses, and that the probabilities were that there would be a report made to the next Congress that would be favorable to the execution of plans that would cause this work to be begun at an early date. I regard this as one of the most important facilities. First, reciprocity; second, shipping; and third, the Nicaragua canal, to put the United States on either coast, the Atlantic or the Pacific, in quick and easy communication with the trade of South America on either coast, the Atlantic or the Pacific. I think that in the past there have been some apprehensions of the people beyond the mountains that a canal would be injurious to their interests. But my conviction is that they would develop a trade in their products on the eastern coasts of South America that would far more than compensate them for any possible losses that they might suffer in the trade that would go through the canal from the eastern part of the United States to the western coasts of South America. It is extremely gratifying to me to find that the commission will probably make a report — and this is the language of the gentleman I talked with — which Congress can and will approve, and that the work upon the canal will begin inside of the next year. [Applause.]

In the development of civilization it transpires that we have practically reached that point when the competitions of the world are rather betwixt nation and nation than betwixt individuals in the same nation. As I have already said, I am not in sympathy with the idea that people in any part of the United States should be in serious competition with the people of any other part. I believe that in the trade of the world it is important that we should co-operate with each other to acquire markets for all our products, to extend our trade in the way that it

will take the products of all our manufactures, give labor to all our people and be profitable to us to work together as one nation in competition with the nations of the world. We have seen in the late war with Spain that there was no question of sectionalism when it came to standing up against any foreign nation or all foreign nations in the matter of the defence of the interests of this country in the war. I regard it equally important that in the commercial war in which the nations of the world are now engaged, as the people of the North and the South went together to stand for this country as against Spain, so we will remain together in the war of commerce to get our proportion of the trade of the world in competition with Germany and England and France and any other country that wants to come into competition with us. [Great applause.]

Mr. President and gentlemen, I thank you for your very courteous hearing. [Renewed applause.]

APPENDIX.

IMPORTS INTO THE COLONY OF SOUTH AUSTRALIA OF COTTON PIECE GOODS, COTTON WASTE AND WICK DURING THE YEAR 1898, ENDING DEC. 31, AND THE UNITED STATES' SHARE THEREOF.

	PIECE GOODS.	WASTE AND WICK.
	£	£
United Kingdom,	203,308	4,274
Australasia,	11,130	150
Canada,	742	. . .
Italy,	313	. . .
France,	587	257
Germany,	4,300	7
United States,	1,283	56
All Other,	5,426	81
Total,	227,089	4,825
	$1,105,129	$23,481
	23,481	
Total Imports,	$1,128,610	

Per cent. Share of the United States, 0.6

IMPORTS INTO THE COLONY OF THE CAPE OF GOOD HOPE OF COTTON MANUFACTURES DURING THE YEAR 1899, ENDING DEC. 31, AND THE UNITED STATES' SHARE THEREOF.

	Piece Goods.	Blankets and Rugs.	Shawls.	Wick.	Hosiery, Etc.	Total.
United Kingdom	$2,573,765	$534,848	$64,491	$8,331	$1,201,743	$4,383,178
France,	156	. . .	. . .	. . .	136	292
Germany,	109,019	12,434	1,124	487	24,269	147,333
United States, (Atlantic Port.)	26,756	1,260	. . .	1,027	15,986	45,029
Other Countries,	15,505	129,210	7,903	637	8,844	162,099
Total,	$2,725,201	$677,752	$73,518	$10,482	$1,250,978	$4,737,931
Per cent. Share of United States,	1.0	.2	. . .	9.8	1.3	1.0

IMPORTS INTO THE COLONY OF NATAL OF COTTON MANUFACTURES DURING THE YEAR ENDING DEC. 31, 1898, AND THE UNITED STATES' SHARE THEREOF.

	Cotton Blankets		Piece Goods.				Total.
			Plain.		Printed and Dyed.		
	Pairs.		Yards.		Yards.		
United Kingdom,	333,701	$133,629	1,024,470	73,085	3,706,333	$315,257	$521,971
France,	4,000	1,100	. . .	. . .	4,346	380	1,480
Germany,	500	151	600	63	130,177	14,950	15,164
United States,	. . .	. . .	12,003	1,280	34,248	2,258	3,538
Other Countries,	. . .	8,195	. . .	2,657	. . .	14,803	25,655
Total,	338,201	$143,075	1,037,073	77,085	3,875,104	$347,648	$567,808
Per cent. Share of the United States		0.0	. . .	1.7	. . .	.7	.6

SUMMARY TABLE SHOWING IMPORTS OF COTTON GOODS BY PRINCIPAL COUNTRIES (AND EXPORTS FROM PRINCIPAL COUNTRIES RESPECTIVELY) INTO THE FOLLOWING COUNTRIES. (YEARS 1898 AND 1899 RESPECTIVELY.)

	United Kingdom.	Germany.	France.	Spain.	Italy.	United States.	Other Countries.	Total.
Argentina,	$9,537,296	$1,357,627	$614,938	$58,477	$4,412,910	$166,901	$515,148	$16,663,297
Share per cent.,	57.2	8.1	3.8	.3	26.5	1.0	3.1	100.0
Chili,	2,957,873	1,039,203	113,600	. . . . .	26,879	209,937	2,903	4,350,395
Share per cent.,	68.0	23.9	2.6	. . . . .	.6	4.8	.1	100.00
Perv,	1,206.438	262,240	58,493	. . . . .	85,377	72,550	31,393	1,716,491
Share per cent.,	70.3	15.3	3.4	. . . . .	5.0	4.2	1.8	100.0
Uruguay,	2,183,456	367,524	136,616	. . . . .	482,016	113,273	549,520	3,832,405
Share per cent.,	57.0	9.6	3.6	. . . . .	12.6	2.9	14.3	100.0
Brazil, (Exports to)	8,636,469	1,781,668	907,712	11,136	703,000	587,202	459,422	13,086,609
Share per cent.,	. . . .	. . . .	. . . .	. . . . .	. . . .	4.5	. . . .	. . . . .
Mexico,	2,942,084	514,006	502,953	118,843	41,527	955,209	136,650	5,211,272
Share per cent.,	. . . .	. . . .	. . . .	. . . . .	. . . .	18.3	. . . .	. . . . .
Turkey, (Exports to)	19,366,417	1,171,000	439,434	(a) 447,615	2,639,000	132,221	281,513	24,344,979
Share per cent.,	. . . .	. . . .	. . . .	. . . . .	. . . .	0.5	. . . .	. . . . .
Cape of Good Hope,	4,383,178	147.333	292	. . . . .	. . . .	45,029	162.099	4,737,931
Share per cent.,	. . . .	. . . .	. . . .	. . . . .	. . . .	1.0	. . . .	. . . . .
Natal,	521,971	15,164	1,480	. . . . .	. . . .	3,538	25,655	567,808
Share per cent.,	. . . .	. . . .	. . . .	. . . . .	. . . .	.6	. . . .	. . . . .
China, (Exports to)	20,769,253	330,106	2,276,682	(b) 12,054,227	45,934	9,844,565	2,879,112	48,199,879
Share per cent.,	. . . .	. . . .	. . . .	. . . . .	. . . .	20.4	. . . .	. . . . .
Australasia,								
Victoria,	5,142,396	84,161	155,300	(c) 79,382	4,375	28,143	46,209	5,539,966
Share per cent.,	. . . .	. . . .	. . . .	. . . . .	. . . .	0.5	. . . .	. . . . .
New Zealand,	1,963,190	2,497	. . . .	(c) 28,318	. . . .	24,459	29,588	2,048,052
Share per cent,,	. . . .	. . . .	. . . .	. . . . .	. . . .	1.2	. . . .	. . . . .
Tasmania,	810,030	1,746	. . . .	(c) 760,012	. . . .	4,794	10,595	1,587,177
Share per cent.,	. . . .	. . . .	. . . .	. . . . .	. . . .	0.3	. . . .	. . . . .
South Australia,	1,010,197	20,960	4,107	(c) 54,894	1,523	6,516	30,413	1,128,610
Share per cent.,	. . . .	. . . .	. . . .	. . . . .	. . . .	0.6	. . . .	. . . . .

(a) Austria. (b) Japan. (c) Australasia.

IMPORTS OF COTTON GOODS INTO QUEENSLAND DURING THE YEAR 1899, ENDING DEC. 31.

	WASTE AND WOOL.		WICKS.		PIECE GOODS.	
	Packages.	£	Packages.	£	Packages.	£
United Kingdom,	535	2,527	34	257	12,078	341,950
New South Wales,	173	630	9	31	2,146	39,435
Victoria,	2	20	4	37	105	2,215
South Australia,	. . .	. . .	. . .	. .	19	120
New Zealand,	. . .	. . .	. . .	. .	1	7
Hong Kong,	. . .	. . .	. . .	. .	29	482
India,	. . .	. . .	. . .	. .	4	344
Canada,	. . .	. . .	. . .	. .	139	1,985
British Columbia,	. . .	. . .	. . .	. .	17	215
Japan,	8	64	. . .	. .	54	812
China,	. . .	. . .	. . .	. .	5	73
Germany,	2	13	1	4	207	5,380
France,	. . .	. . .	. . .	. .	20	730
Italy,	. . .	. . .	. . .	. .	19	639
Belgium,	. . .	. . .	. . .	. .	7	246
United States,	23	77	15	48	627	8,137
Total,	743	3331	63	377	15,477	402,770
		$16,210		$1,835		$1,960,080

Value of Total Imports of Cotton Goods, $1,978,125.
Per cent. Share of the United States ($43,443) = 2.2

IMPORTS BY COUNTRIES OF COTTON GOODS INTO MEXICO DURING THE YEAR 1898, ENDING DECEMBER 31, AND THE UNITED STATES' SHARE THEREOF.

	Yarn and Thread. Dollars.	Textures. Dollars.	Manufactures. Dollars.
Germany,	$26,770	$231,314	$255,922
Austria,	442	13,856	18,849
Belgium,	11,248	9,328	7,678
Columbia,	. . .	155	180
China,	56	98	9
Spain,	16,646	68,323	33,874
France,	5,341	241,546	256,066
Netherlands,	. . .	1,376	844
Italy,	. . .	33,867	7,660
Sweden and Norway,	. . .	839	. . .
Switzerland,	. . .	3,719	66,682
Guatemala,	6	18	2
India,	. . .	108	. .
Japan,	. . .	934	169
United Kingdom,	632,957	2,129,469	179,658
United States,	35,386	832,504	87,319
Total,	$728,852	$3,567,454	$914,912

Total Imports of Cotton Goods, $5,211,272.
Imports from the United States, 955,209.
Per cent. Share of United States is 18.3

IMPORTS OF TEXTILE GOODS INTO TASMANIA DURING THE YEAR 1898, ENDING DEC. 31.

	Fabrics, Textile and Dress.	
	£ s. d.	
United Kingdom,	166,450— 3—10	
Victoria,	141,281— 7— 1	
New South Wales,	16,557—14— 6	
New Zealand,	186—13—10	
South Australia,	144— 1— 5	
West Australia,	2— 6— 0	
India,	1— 0— 0	Per cent. Share of the United States, ($4,794) = 0.3
Germany,	358—17— 5	
Belgium,	67— 7—10	
Japan,	93—14— 2	
America,	985— 2—11	
China,	15— 6— 0	
	326,143—15— 0	
	$1,587,177	

IMPORTS OF COTTON MANUFACTURES INTO VICTORIA DURING THE YEAR 1898 ENDING DEC. 31.

	Cotton Piece Goods.		Cotton Manufactures, Articles of (Not Being Apparel.)		Cotton Wick.	
	Packages.	£	Packages.	£	Pounds	£
United Kingdom,	22,846	877,460	4,644	177,137	41,921	2,096
New South Wales,	1,024	16,312	99	2,050	. .	. . .
New Zealand,	24	538	2	32	. .	. . .
Queensland,	38	187	2	26	. .	. . .
South Australia,	70	671	26	517	825	33
Tasmania,	13	239	8	138	. .	. . .
Western Australia,	12	292	1	18	. .	. . .
Belgium,	76	2,234	17	250	. .	. . .
Canada, East Coast,	6	62	. . .	. . .	. .	. . .
Cape Colony,	1	2	. . .	. . .	. .	. . .
Egypt,	15	1,165	18	697	. .	. . .
France,	790	29,713	74	2,199	. .	. . .
Germany,	379	12,509	149	4,735	1,024	50
Holland,	6	141	. . .	. . .	. .	. . .
Hong Kong,	12	230	8	83	155	5
India,	8	68	1	2	. .	. . .
Italy,	29	794	2	105	. .	. . .
Japan,	16	280	8	69	30	2
Straits, Settlements,	12	97	8	189	. .	. . .
U. S., East Coast,	325	5,209	55	453	2,307	121
Total,	25,702	948,203	5,122	188,700	46,262	2,307
		$4,614,430		$914,309		$11,227

Total Imports of Cotton Manufactures, $5,539,966; U. S. Imports, $28,143.
Per cent. Share of the United States, 0.5

IMPORTS OF COTTON MANUFACTURES INTO THE COLONY OF NEW ZEALAND DURING 1898, ENDING DEC. 31, AND THE UNITED STATES' SHARE THEREOF.

COTTON PIECE GOODS.	United Kingdom.	Austral-asia.	United States.	Ger-many.	All Other.	Total.
	£	£	£	£	£	£
Butter and Cheese Cloth, Free of Duty.	1,911	85	163	. .	. . .	2,519
Calico, White and Gray, (free)	120,759	605	234	. .	219	121,817
Corduroy, Moleskin and Beaverskin, (free)	9,941	37	. . . .	. .	31	10,009
Leather Cloth, (free)	4,122	23	421	. .	10	4,576
Shirtings, Colored Cotton (free)	30,222	164	15	. .	124	30,525
Shirtings, Flannelette, (free)	6,595	3	. . .	36	. . .	6,634
Shirtings, Union, of 6d. per yd. and under, free	4,074	. . .	. . .	. .	. . .	4,074
Tubular Woven Cotton Cloth, (free)	6,434	. . .	. . .	. .	. . .	6,434
Waterproof Material, (free)	29,206	223	25	. .	. . .	29,454
Unenumerated, 20 per cent. ad val.,	95,481	2,269	125	463	400	98,738
Unenumerated, 10 per cent. ad val.,	91,558	2,402	4,043	14	*5,296	103,313
Wick,	3,106	8	. . .	. .	. . .	3,114
	£403,409	£5,819	£5,026	£513	£6,080	£420,847
Total,	$1,963,190	$28,318	$24,459	$2,497	$29,588	$2,048,052

*£4,503 worth from Canada.
Per cent. Share of the United States, 1.2

EXPORTS TO BRAZIL OF COTTON MANUFACTURES DURING THE YEAR 1899 FROM THE PRINCIPAL EUROPEAN COUNTRIES AND THE UNITED STATES.

United Kingdom.

Articles.	Quantity.	Valve. Dollars.
Cotton yarn and twist, grey, lbs,	967,100	142,389
do. bleached and dyed, lbs.,	707,900	145,245
Piece goods, unbleached, yards,	7,930,700	251,428

IMPORTS INTO CHILI OF COTTON MANUFACTURES DURING THE YEAR 1898,

	United Kingdom.		Germany.		
	Kilo.	Pesos.	Kilo.	Pesos.	Kilo
Cotton Goods, bleached, (Jéners de alzodón blanco)	1,377,086	2,070,946	196,716	297,711	14,2
Chintzes and Percales,	587,715	1,763,149	111,772	335,318	21,2
Flannels, of all sorts,	401,793	822,077	143,090	289,929	14,6
Domestics, ("tocuyos")	795,007	954,111	127,030	152,454	12,0
Cotton Goods for Pantaloons,	238,117	422,534	376,127	677,019	6,7
Cotton Drillings, ("Brines y driles")	120,740	218,199	207,914	374,660	4,8
Checkered and Striped Goods, ("listados")	312,401	499,828	41,342	66,136	1,2
Bombazettes, of all sorts, (cayeta surtida)	104,002	369,627	15,416	53,313	. .
Handkerchiefs and Shawls,	65,037	235,171	37,846	126,431	1,7
Shag, ("tripes")	135,070	288,352	10,164	23,414	14,2
Cottons dyed,	44,932	140,590	15,937	45,680	5,6
Hosiery, cotton, (dozen)	14,580	31,696	70,001	146,278	5,9
Towels of all sorts,	18,340	52,676	8,608	23,309	3,7
Piece Goods, n. e. s.	22,168	61,922	11,854	28,711	4,6
Ribbons, Scarfs, Etc.,	3,199	16,522	13,604	65,072	1,7
Blond-lace, Lace-thread, Miñaques, Etc.,	3,662	45,041	2,729	34,761	5
Cords, Braids, Plaits, Etc.,	2,104	13,042	7,761	59,929	7
Cottons, twilled,	42,717	61,027	4,071	5,790	1,2
Umbrellas and Parasols, dozen,	729	7,837	1,208	16,080	6
Shirts,	. . .	6,768	. . .	8,762	. .
" partly composed of thread,	368	11,796	167	4,721	2
Cottons with mixture of jute,	2,816	8,136	3,037	7,752	1,7
" with mixture of thread.	1,193	2,715	1,110	3,902	2
Total,		8,103,762		2,847,132	
		$2,957,873		$1,039,203	
Per cent. Share,		68.0		23.9	

ENDING DECEMBER 31, AND THE UNITED STATES' SHARE THEROF.

rance.		Italy.		United States.		All Other Countries.		Total.	
	Pesos.	Kilo.	Pesos.	Kilo.	Pesos.	Kilo.	Pesos.	Kilo.	Pesos.
6	21,502	815	1,223	8,545	12,821	23	35	1,597,421	2,404,238
8	63,654	2,839	8,518	8,232	24,696	. . .	. . .	731,776	2,195,335
9	32,167	8,967	17,738	152,259	287,309	. . .	. . .	720,748	1,449,220
7	14,469	. . .	. . .	172,615	207,136	. . .	. . .	1,106,709	1,328,170
8	12,219	13,278	24,027	6,303	11,346	. . .	. . .	640,613	1,147,145
5	8,689	996	1,779	1,845	3,321	239	430	336,599	607,078
0	2,012	2,722	4,353	3,486	5,573	. . .	. . .	361,211	577,902
.	. . .	. . .	. . .	208	749	. . .	. . .	119,626	423,689
5	7,258	204	584	1,532	5,190	. . .	. . .	106,354	374,634
4	38,537	. . .	. . .	12	24	912	1,778	160,442	352,105
5	17,926	847	2,731	209	627	178	534	67,758	208,088
0	18,203	747	1,262	. . .	. . .	102	205	91,406	197,644
9	12,019	945	3,238	. . .	. . .	142	650	31,833	91,892
5	12,156	85	187	1,655	4,377	. . .	. . .	40,417	107,353
6	9,000	204	979	. . .	. . .	. . .	. . .	18,723	91,573
4	10,472	. . .	. . .	. . .	. . .	. . .	. . .	6,895	90,274
1	7,104	23	243	61	336	. . .	. . .	10,740	80,654
7	2,077	235	357	7,243	11,599	. . .	. . .	55,543	80,850
0	8,752	337	5,400	. . .	. . .	10	42	2,944	38,111
.	1,577	. . .	866	. . .	67	. . .	4,184	. . .	22,224
1	5,377	2	52	. . .	. . .	2	96	850	22,042
8	5,328	36	104	. . .	. . .	. . .	. . .	7,637	21,320
1	736	. . .	. . .	. . .	. . .	. . .	. . .	2,554	7,353
	311,234		73,641		575,171		7,954		11,918,894
	$113,600		$26,879		$209,937		$2,903		$4,350,395
	2.6		.6		4.8		.1		100.0

Articles.	Quanitty.	Value. Dollars.
do., bleached, yards,	32,434900	1,482,822
do., printed, yards,	58,110,400	2,930,037
Cotton manufactures, dyed or made of dyed yarn,	34,085,600	1,953,364
Lace and patent net,	———	228,750
Hosiery, stockings and socks, doz. pairs,	2,900	4,594
do. of other sort,	———	14,176
Thread for sewing, lbs.,	1,318,600	1,105,323
All other cotton manufactures,	———	378,341
Total,		8,636,469

Germany.

	Pounds.	Dollars.
Cotton yarn and thread,	172,800	56,168
Wicks, unwoven,	1,300	238
Cotton goods:		
Textures, close weft, rough,	15,000	4,998
do. bleached and finished,	116,200	43,792
Velvet, cut,	7,300	4,760
Textures, close weft, dyed, printed, &c.,	2,409,400	949,382
Cotton goods for trimming and button-making,	167,100	120,904
Knit goods; tricot, gloves and stockings,	703,300	453,866
Textures, loose weft, rough, N. E. S.,	5,700	3,570
do., loose weft, bleached, dyed and printed,	89,700	64,974
Laces, embroidery, &c.,	21,600	74,732
All others,	28,900	4,284
Total,		1,781,668

France.

Textures, headgear, hosiery, gimp, ribbons, &c.,	1,788,832	907,712

Belgium.

Cotton textures,	———	176,000

Articles.	Quantity.	Value. Dollars.
Italy.		
Cotton yarn, textures, tulles, wearing apparel, &c.,	———	703,000
Spain (1898).		
Cotton manufactures,	———	11,136
Switzerland.		
Cotton manufactures,	———	187,261
Portugal.		
Cotton manufactures,	———	96,161
Total Europe.		
Cotton manufactures,	———	12,499,407
United States.		
Cloth, colored, yards,	6,671,292	375,871
do., uncolored, yards,	2,656,887	169,674
Wearing apparel,	———	9,306
Waste, cop and mill, lbs.,	1,886	106
All others,	———	32,245
Total,		587,202
Total cotton exports to Brazil,		$13,086,609
Per cent. of the United States,		4.5

According to the custom house returns of the port of Rio de Janeiro the imports at that port of cotton goods during the year 1889 were as follows (in milreis at 12*d* per milreis) :

Germany,	4,734,487	$ 129
Argentina,	537	$ 666
Austria-Hungary,	61,294	$ 402
Belgium,	565,692	$ 851
Chili,	93	$ 333
United States,	350,457	$ 423
France,	2,242,777	$ 912
Great Britain and British Possessions,	20,586,715	$ 024

Spain,	16,393	$ 999
Holland,	610	$ 000
Italy,	2,158,550	$ 140
Portugal,	376,554	$ 181
Japan,	40	$ 000
Switzerland,	84,832	$ 833
Uruguay,	3,118	$ 333
Total,	31,182,149	$6226

Equal to	$7,587,399	in American currency.
Share of the United States,	$828,429	in American currency.
Per cent.,	10.9	

EXPORTS OF COTTON MANUFACTURES TO TURKEY, EUROPEAN AND ASIATIC, BY PRINCIPAL COUNTRIES DURING 1899.

Great Britain.

	Quantity.	Pounds.
Cotton yarn lbs.,	20,193,600	643,987
Cottons,	———	3,262,513
Foreign and Colonial produce,	———	73,037
Total,		3,979,537
		$19,366,417

United States.

	Quantity.	Dollars
Cloths, colored, yards,	2,305,198	117,288
do. uncolored,	234,512	11,172
Wearing apparel,	———	2,317
All other,	———	1,444
Total,		132,221

Germany.

	Kilogram.	Marks.
Yarn,	175,800	655,000
do. textures, close weft, rough,	800	2,000
do. bleached and finished,	13,800	48,000
do. velvet, cut,	14,000	87,000

Textures, close weft, dyed, printed, etc.,	540,800	1,974,000
Textures for trimming and button making,	47,200	316,000
Knit goods, tricot gloves, hosiery, etc.,	260,300	1,538,000
Textures, loose weft, rough, N. E. S.,	5,100	18,000
do. bleached, dyed, printed,	15,200	102,000
Laces, embroidery, etc.,	5,200	163,000
All other,	14,800	17,000
Total,		4,920,000
		$1,171,000

Austria-Hungary.

	Kilogram.	Kronen.
Yarn, thread, etc.,	282,100	478,000
Cotton goods,	485,700	1,727,000
Total,	767,800	2,205,000
		$447,615

Italy.

Cotton goods exported to

	Lire.
European Turkey,	10,825,000
Asiatic Turkey,	2,848,000
Total,	13,673,000
	$2,639,000

Belgium.

	Kilogram.	Francs.
Yarn, thread, etc.,	225,441	475,000
Textures,	———	926,000
Total,		1,401,000
		$270,000

Russia.

	Pounds.	Dollars.
Cotton textures,	26,290	11,513

France.

	Kilogram.	Dollars.
Textures, passementery, ribbons, hosiery,	374,247	439,434

Recapitulation.

	Dollars.
Great Britain,	19,366,417
Germany,	1,171,000
France,	439,434
Italy,	2,639,000
Austria-Hungary,	447,615
Belgium,	270,000
Russia,	11,513
Total,	$24,344,979
Share per cent. of the United States,	0.5

EXPORTS TO CHINA OF COTTON MANUFACTURES FROM THE PRINCIPAL EUROPEAN COUNTRIES AND THE UNITED STATES DURING THE YEAR 1899.

United Kingdom.

Articles.	Quantity.	Value. Dollars.
Cotton yarn and twist grey, lbs.,	3,709,500	520,798
do. bleached and dyed, lbs.,	215,800	36,041
Piece goods, unbleached, yards,	251,855,600	9,791,257
do. bleached, yards,	100,742,300	4,780,407
do. printed, yards,	22,915,900	1,166,850
Cotton manufactures, dyed or manufactured of dyed yarn, yards,	53,892,500	3,906,860
Lace and patent net,	———	41,487
Hosiery, stockings and socks,	4,300	6,083
Hosiery of other sorts, doz. pairs,	———	8,463
Thread for sewing, lbs.,	456,000	257,336
Other manufactures, N. E. S.,	———	253,671
Total,		20,769,253

Germany.

	Pounds.	Dollars.
Cotton yarn,	25,600	10,710
Cotton goods, textures, close weft, rough,	7,700	2,856
do. dyed, printed, etc.,	260,600	102,578
Velvet, cut,	7,700	5,236

Cotton goods for trimming and button making,	69,900	50,456
Knit goods (tricot, gloves and stockings),	703,300	453,866
Textures, loose weft, rough, N. E. S.,	700	476
Textures, loose weft, bleached, dyed, printed, etc.,	12,500	10,948
Lace, embroidery, etc.,	400	1,428
All other,	42,300	4,998
Total,		643,552

Japan.

	Quantity.	Dollars.
Cotton yarn, lbs.,	110,733,400	11,409,944
" blankets,	———	37,260
" textures,	———	533,348
" towels, doz.,	147,539	55,337
" handkerchiefs, doz.,	5,056	1,065
" shirts, doz.,	473	1,900
" undershirts and drawers, doz.,	7,472	9,020
" socks and stockings, doz.,	16,555	4,329
Trimmings,	———	273
Waste yarns,	———	1,751
Total,		12,054,227

Russia (1898).

	*Pounds.	Dollars.
Cotton textures,	3,230,724	1,821,330

Belgium.

Yarn,	41,688
Textures,	744,208
Total,	785,896

Italy.

Cotton manufactures,	45,934

*241,770 lbs., $125,440 without bounty.
680,170 " 384,503; bounty, $1.18 per 36,112 lbs.
1,924,156 " 1,108,036; " 1.26 " "
384,628 " 203,351; " 1.44 " "

Austria-Hungary.

Yarn and textures,		5,700

Netherlands.

Cotton stuffs,		266,213

France.

	Pounds.	Dollars.
Textures, wearing apparel, hosiery, ribbons, &c.,	5,191,024	2,276,682

Total Europe.

United States.

	Yards.	Dollars.
Cloth, colored,	15,685,923	651,895
Cloth, uncolored,	205,357,719	9,171,358
Wearing apparel,	———	5,876
All other,	———	15,436
Total,		9,844,565
Total exports of cotton manufactures to China,		$48,199,879
Per cent. of the United States,		20.4

The PRESIDENT. Gentlemen, you have made so clearly manifest your approval of the address of our friend, Mr. TOMPKINS, that comment on my part is quite unnecessary. We always hail with pleasure the presence of our friend, as also do all other associations with which he is in affiliation. It is possibly of exceptional interest to us because of his relation to Southern interests. We desire to know as much concerning them as possible. I quite agree with him that there is very much that we have in common. Coöperation will contribute material advantage to the interest of both sections.

As concerning the reference of the speaker to the President, I acknowledge with thanks his very flattering tribute and accept with the kindliest spirit his equally pleasant and gentlemanly criticisms.

In regard to the book to which he refers, I will here promise in your presence that it shall be sent to him immediately, express prepaid.

The next in order is a paper upon Our Cotton Export Trade with China, by Mr. DANIEL MOORE BATES, of Wilmington, Del.

OUR COTTON EXPORT TRADE WITH CHINA.

DANIEL MOORE BATES, Wilmington, Del.

Those who have followed up the remarkable growth in recent years of our cotton export trade with China will find in this paper but a repetition of well known facts. Many, however, have only very general ideas on the subject. While the attention of the whole civilized world is centered upon China, it seems opportune to point out the most striking features of this trade to our cotton manufacturers. The following questions naturally present themselves.

What is the extent of our cotton trade with China and how does it compare with that of other nations?

What parts of China does it supply?

What sections of our country contribute to it?

What are the possibilities of further development?

What bearing are the present disturbances and the future actions of the Powers likely to have upon it?

EXTENT OF THE TRADE.

Our exports of cotton goods to China consist for the most part of drills and sheetings, with a comparatively small amount of cotton jeans. In drills and sheetings the United States stands head and shoulders above her rivals. In the words of the Chinese Customs Commissioner, at Shanghai, "American cottons are steadily making their way and rule the market in the North. Quality considered, they can in price defy the competition of their older rivals."

		1898. Hk. taels.	1899. Hk. taels.	Percentage of increase.
Drills,	American,	3,625,229	4,216,004	16.3
	English,	200,044	225,709	12.8
	Dutch,	50,623	102,986	103.4
	Indian,	5,403	11,566	114.0
	Japanese,	2,632	26,384	902.0
Sheetings.	American,	6,219,315	9,610,090	54.5
	English,	1,309,022	1,893,549	44.6
	Indian,	36,344	102,121	180.9
	Japanese,	15,210	84,409	454.9
Jeans.	American,	211,796	272,745	28.7
	English,	248,046	151,062	39.1 (Decrease)
	Dutch,	80,938	52,094	34.4 (Decrease)

The above table shows the value in haikwan taels* of the total exports direct to China of drills, sheetings and jeans from the countries named, for the past two years. It is seen that our exports of these goods show a substantial increase, even in the case of jeans where the others show a large falling off. In drills and sheetings the increase is larger proportionately than that of Great Britain, though it does not keep pace with that made by the other countries represented. The nature of the competition we have to meet is shown in the following extract from the Imperial Maritime Customs report for 1898.

"Dutch goods are rapidly losing ground. The importation of Dutch drills in 1896 was 84,334 pieces, in 1897 25,862 pieces, and in 1898 only 18,318 pieces. Dutch jeans were 54,260 pieces in 1896, 50,890 pieces in 1897, and 38,475 pieces in 1898. Dutch sheetings have disappeared. They can not keep pace in price and quality with those of the United States. The export of cottons from India, which lately showed so great an advance, has been checked by a large home demand.

---

* NOTE. — The haikwan (customs) tael equals 1⅓ ounces (avoirdupois) of silver. The following table gives an idea of its recent values.

1899.				1900.
Jan. 1st.	Apr. 1st.	July 1st.	Oct. 1st.	Jan. 1st.
$0.722	$0.714	$0.728	$0.718	$0.703

* * * Of Indian drills, in 1896 39,775 pieces were imported, 11,243 pieces in 1897, and only 2,078 pieces in 1898. Indian sheetings have declined from 156,709 pieces in 1896, 23,700 pieces in 1897, to 16,520 pieces in 1898. * * * Japanese sheetings show an immense decline, said to be due to inequality of texture, which handicaps them in competition with American goods. Manchester can no longer compete with the United States in the importation of drills, jeans and sheetings, owing to the lower prices at which the latter country can land this class of goods in China. In these heavy makes, which use up a large quantity of cotton without demanding such delicate machinery and highly skilled labor as are required for finer goods, such as shirtings, the freight on the raw cotton to England makes an appreciable difference in the cost of production. Freights from New York are lower than from Liverpool. The goods pass through fewer hands in America. Prices are also influenced by the fact that while American manufacturers are using every effort to secure the market here, Manchester has more orders at present than can be immediately executed, and the large demand from India keeps the mills fully occupied. America does not yet compete with Great Britain in finer makes."

While this report is very gratifying, it will be seen that in 1898 low-water mark was reached by our smaller competitors in drills and sheetings after a continued falling off in these grades for several years. The spurt shown by them in 1899 (see table) is therefore the more remarkable and is largely due to the activity of Japan, whose goods the past year have shown an especially rapid development.

Practically all of our goods which enter China go through Shanghai with the exception of those shipped via Hong Kong, which are not included in the official report as from the United States. In 1899 our shipments to ports in China amounted to about fourteen and one-half millions of dollars, and those to Hong Kong to about seven and one-half millions of dollars. Of this total of some twenty-two million dollars worth of goods it is estimated that twenty million dollars worth was consumed in China proper. Most of the goods entering Hong Kong go into Southeastern China, those entering Shanghai going to the north and east, by coastwise vessels to the seaboard ports and by

steamers up the Yangste to Hankow, the great inland distributing point. Almost all of our cotton goods pass through Shanghai.

The following table for the years 1895 to 1899 inclusive, from the reports of the Chinese Customs, shows the development of our cotton exports in that brief period, the trade having trebled in five years.

COTTON IMPORTS FROM UNITED STATES INTO CHINA.—DIRECT.

Date.	Sheetings, Pieces.	Drills, Pieces.	Jeans, Pieces.	Values Haikwan Taels.	Total Values Haikwan Taels.
1895,	762,095	. . . .	. . . .	2,286,269	
	. . . .	518,402	. . . .	1,760,356	
	. . . .	. . . .	21,798	43,689	4,090,314
1896,	2,251,600	. . . .	. . . .	6,667,357	
	. . . .	1,226,759	. . . .	3,531,320	
	. . . .	. . . .	52,480	118,104	10,316,781
1897,	2,418,971	. . . .	. . . .	6,800,141	
	. . . .	1,531,647	. . . .	4,469,992	
	. . . .	. . . .	68,076	157,419	11,427,552
1898,	2,483,991	. . . .	. . . .	6,219,315	
	. . . .	1,314,761	. . . .	3,625,229	
	. . . .	. . . .	105,759	211,796	10,056,340
1899.	3,975,903	. . . .	. . . .	9,610,090	
	. . . .	1,626,107	. . . .	4,216,004	
	. . . .	. . . .	126,303	272,745	14,098,839

COMPARATIVE TABLE.

Date.	Total Imports from Great Britain.	Total Imports from United States.	Cotton Imports from the United States.	Cotton Imports in per ct. of total Imp. from U.S.	Total Imports of Foreign Cottons.	Cotton Imports from U.S. in per ct. of total Imports of Foreign Cottons.
1895.	33,960,000	5,093,000	4,090,314	80 %	53,074,000	7½ %
1896.	44,571,000	11,930,000	10,316,781	86 %	79,243,000	13 %
1897.	40,016,000	12,440,000	11,427,552	92 %	78,663,000	14½ %
1898.	34,962,000	17,163,000	10,056,340	58 %	77,619,000	13 %
1899.	40,161,000	22,289,000	14,098,839	63 %	103,465,000	13½%

The second table shows the relative proportion in haikwan taels of our cotton imports into China to our total trade with China direct, and also to the total import trade into China of foreign cottons. The column of total imports from Great

Britain is inserted to give an idea of how our totals compare with those of the one rival by whom we are distanced. A glance at these two columns shows that while British trade has remained practically stationary for the past four years, ours has increased by leaps and bounds, being now equal to more than one-half that of Great Britain while in 1895 it was not one-sixth. This does not include the trade of either country through Hong Kong which is so involved as to be impossible for comparison. It is seen that for this period our cottons have supplied on the average over seven-tenths of all our direct imports into China and about one-eighth of all the imports of foreign cottons, which in addition to drills, jeans and sheetings include shirtings, T cloths, cotton flannels, yarns and many other cotton fabrics both dyed and plain in which American competition takes as yet no active part.

The remarkably high proportion (92 per cent.) borne by our cotton imports to our total trade in 1897 is doubtless due to the hard times which then prevailed in the United States, while the falling off in the same figures for 1898 and 1899 may be accounted for by the important and increasing share which flour and kerosene have of late years taken in our China trade, by the disturbances which were even then seriously affecting North China which takes the bulk of our cottons, and by the high prices prevailing in the United States. The last two reasons also explain the slight decrease since 1897 in our proportion of the total imports of foreign cottons; English sheetings and Japanese cloths taking the place of the American cottons withheld for the home market. At the same time it is satisfactory to note how well our proportion of the cotton imports into China has been sustained in the face of these conditions. It shows, as stated in the customs report quoted above that " American manufacturers are using every effort to secure the market ", and that our export trade is being pushed in a systematic way and not taken up fitfully merely as an outlet for our surplus product.

Figures speak for themselves. A short study of the above tables must convince one that cotton goods form the large, sub-

stantial part of this rapidly growing export trade; that in all the lines of cottons already established we are showing a remarkable and a steady advance; and that, in spite of all this, there is a large field in this cotton trade upon which American competition has never entered.

In this connection the remarks of Mr. JAMES S. FEARON, of the Shanghai Chamber of Commerce, are very interesting.

"The increase in the importations of American cottons into China from 1887 to 1897 was 120 per cent., while there was a decrease of about 15 per cent. in the trade with England during that period. There was an increase in the deliveries of American cloth in China in 1898 over 1897 of 25 per cent., and up to the end of August of this year there has been a further increase of 25 per cent. in the deliveries for consumption over the same period in 1898. These figures show the steady increase and growing importance of our trade, but, notwithstanding the strides it has made in the past ten or twelve years, I venture to say that the next five years will show still greater development, as there is a general disposition on the part of the natives to take American cloth whenever obtainable, in preference to the filled Lancashire made goods they have hitherto used, even at a somewhat enhanced cost.

I feel satisfied that it is only a question of a few years when American manufacturers will control this great trade, and that there is ample room for the expansion I anticipate is evident when it is remembered that our exports amount to but 40 per cent. of the plain cottons used in China.

During the year 1898 the exports to China from Great Britain amounted to 390,000,000 yards of plain cloth, of which 70,000,000 yards were bleached; 50,000,000 yards were dyed and colored, and 15,000,000 yards were printed goods, or 455,000,000 yards in all, while our own exports did not exceed 160,000,000 yards, about 98 per cent. of which consisted of 2.85 yard, 3 yard, and 3¼ yard drills and sheetings. These goods as you are probably aware, are almost exclusively sold in the northern provinces of China, and should those nations who now claim this section as their sphere of influence show any disposition to restrict that market to the vantage of their own citizens there is grave danger that this valuable trade will be lost to us unless the Government of this country proceeds to obtain substantial guarantees that the trading privileges we now enjoy, under our treaties with China, shall not be interfered with.

As I have already pointed out, our exports of cloth to China now consist almost exclusively of coarse yard heavy goods, which find their market in the northern provinces; but there is no reason why our mills should not make an effort to secure a portion of the trade of the great Yangtsze Valley, and of southern China, by giving more attention to the manufacture of the finer yarn and lighter cloths required there."

LOCATION OF OUR MARKETS IN CHINA.

The three great treaty ports, Newchwang, Tientsin and Chefoo get the great bulk of our cotton goods — 80 per cent. of all the cotton drills and over 90 per cent. of all the sheetings. All of these places are in the northeastern part of the Empire, on or near the Gulf of Pechili. The present troubles in China have made their names familiar. Newchwang, the most important city in the province of Shengking in Manchuria, is at the extreme north of the Gulf of Pechili; Tientsin, the most important city of Northern China, situated in the province of Chili, is on the Pei-Ho, at the head of the Gulf and but 80 miles from Pekin; while Chefoo on the Shantung peninsula is on the southern side near the mouth of the Gulf and but a short distance west of the British port of Wei-hai-wei. The preponderance of our cotton exports to these three places compared with what goes to the rest of China is shown in a striking manner in the following table.

1898.

IMPORTS AND RE-EXPORTS AT SHANGHAI OF AMERICAN COTTON GOODS SHOWING THE PRINCIPAL DISTRIBUTING MARKETS.

	Drills.	Sheetings.	Jeans.
Total Imports at Shanghai (in pieces),	1,212,046	2,349,865	103,600
	all kinds,	**3,665,541**	
Total Re-exports from Shanghai,	1,519,635	2,995,627	109,295
	all kinds,	**4,624,557**	
Re-exports to Tientsin,	669,175	1,732,220	68,670
" " Newchwang, 5	346,670	586,373	11,165
" " Chefoo, 9	166,583	530,542	8,940
Total Re-exports to Three Northern Ports,	1,182,428	2,849,135	88,775
	all kinds,	**4,120,338**	
		=**89%** of total.	
Re-exports to Chinkiang,	57,735	9,370	. . .
" " Wuhu,	9,770	1,280	. . .
" " Kiukiang,	7,590	2,260	. . .
" " Hankow,	188,275	14,195	. . .
Total Re-exports to Four Yangtze Ports,	263,370	27,105	. . .
	all kinds,	**290,475**	
		=**6¼** % of total.	

The importance of American goods in this northern market is also clearly shown by the report of the British Consul at Newchwang in 1899. It reads in part:

"The value of the net import of cotton goods into China from foreign countries in 1898 was 77,618,824 haikwan taels (£11,088,403), of which nearly 10 per cent., 7,698,585 haikwan taels (£1,099,798), found its way into Manchuria through the port of Newchwang, and of this latter total a sum of 3,434,585 haikwan taels (£490,655) is credited to American sheetings (625,982 pieces, value £307,744), drills (367,916 pieces, value £181,495), and jeans (3,380 pieces, value £1,416). In 1897 a total of 2,418,971 pieces of American sheetings were imported into China, of which Tientsin consumed 1,259,908; Newchwang 566,107 and Chefoo 336,741 pieces, leaving a balance of only 256,215 pieces for the rest of China. So with drills: In 1897 Tientsin absorbed 554,155; Newchwang 349,195 and Chefoo 142,955, out of a total import into China of 1,531,647 pieces. In other words, the chief markets

for American manufactured cottons in China are the northern provinces and Manchuria. Why is this so, and why is it that American cottons are superseding English goods in these markets? The answer is, that the heavier makes of goods are in greatest demand in the colder north; that America is our competitor in these makes, and that these American goods are superior to and cheaper than English. * * * I am told that the proof of the superiority of the American goods is in the washing. When English goods are washed and the heavy sizing removed they are very inferior to the American article when similarly treated. America is at present a successful rival in the heavier manufactured cottons, and there is nothing to prevent her from entering the lists against us in the higher grades. The setting up of machinery for the purpose is simply a question of time, and if we are to regain the ground which we have already lost and maintain what is left to us we must manufacture goods equal to and as cheap as those of our rival."

The other treaty ports naturally divide themselves into those of the Yangtse basin of which Shanghai, "the New York of China", is at the mouth; those along the coast between Shanghai and Canton, the great distributing center of the South at the mouth of the West River, and those at the South below Canton.

The following table in haikwan taels of *net* imports (*i. e.* imports not re-exported) shows the distribution throughout China of our drills and sheetings — which in 1898 formed 98 per cent. of our cotton imports into China. It also shows for the same period, the exports of Great Britain, our principal competitor in these two lines. Shanghai, being principally a redistributing center, is not included in the list. The full reports for 1899 are not yet at hand. It is encouraging to note from 1897 to 1898 a gain in the three northern treaty ports of 1,950,180 haikwan taels in American trade and a corresponding loss of 303,947 haikwan taels in British, in the ports of the Yangtse basin a gain of 174,880 haikwan taels in American trade and a loss of 117,040 haikwan taels in British, and in the coast ports between Shanghai and Canton a gain of 35,036 haikwan taels in American trade and a loss of 5,034 haikwan taels in British. The only section where we find these conditions reversed is Canton and the South. The ports where our jeans are found in any quantity are Hankow, Swatow, Chefoo and Newchwang.

SECTIONS OF OUR COUNTRY INTERESTED.

What sections of our country contribute to this large and flourishing trade in North China? In commenting on the great increase of American sheetings in 1898 the Imperial Maritime Customs Commissioner at Newchwang mentions that the sheetings most sought are from Massachusetts and have a "flying horse" on them. The importance of the trade mark in China is well illustrated by these few lines from the report above referred to of the British Consul at Newchwang in 1899.

"It is perfectly immaterial to him whether the goods he (the Chinese merchant) deals in are manufactured in Great Britain or in the United States of America, and as a matter of fact I have asked native wholesale merchants here if they could tell me where the favorite sheetings and drills consumed in Manchuria are manufactured, and they have confessed their entire ignorance of the country of origin, stating at the same time that they merely indent for their purchases by the special brand or 'chop'."

JOHN BARRETT, our ex-minister to Siam, speaking of China, says,

"Few people appreciate that she provides the chief market for the export of our manufactured cotton goods, and that the majority of the new cotton mills established throughout the South are solely supplying the Chinese trade."

And again,

"It is remarkable that among the most popular manufactured cotton products in China today are those which come from the Southern mills. The demand for this line of goods is already large, but the best judges of Asiatic trade say that there is no reason why it should not reach into scores of millions. * * *

The particular market for these Southern mills is Manchuria, as I have elsewhere intimated, and, therefore, they have a special concern in seeing that Manchuria is never closed to them. * * *

The cotton manufacturers of the South have millions of invested capital practically dependent upon the market of Manchuria being kept open."

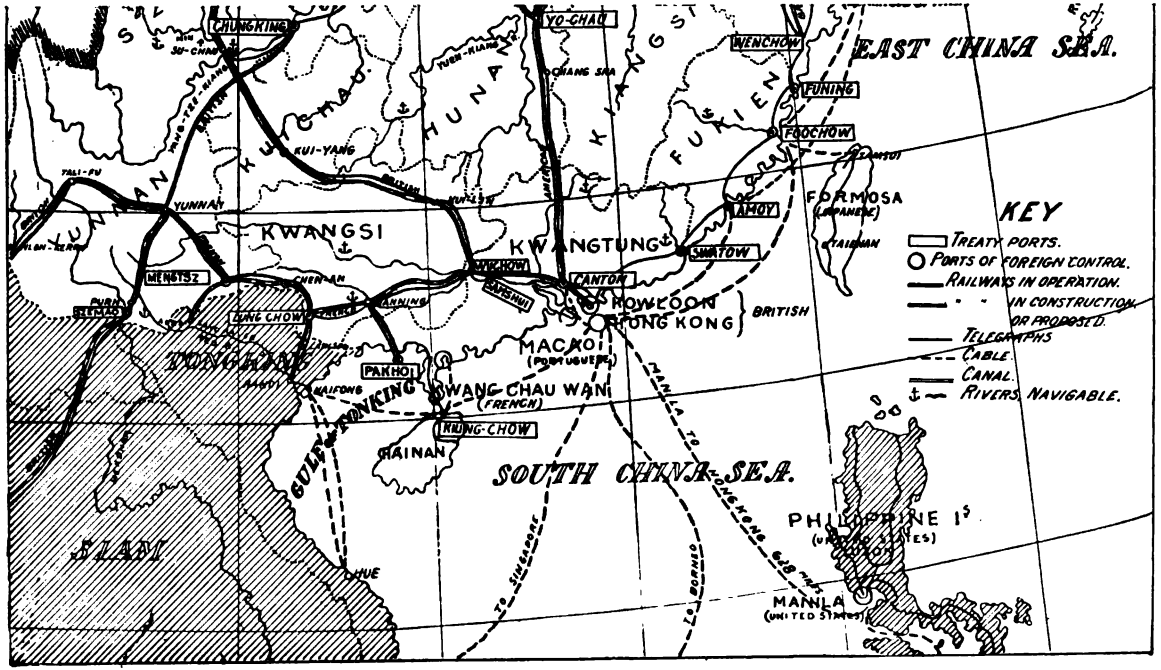
EAST CHINA SEA.
SOUTH CHINA SEA.
KEY
TREATY PORTS.
PORTS OF FOREIGN CONTROL.
RAILWAYS IN OPERATION.
IN CONSTRUCTION.
OR PROPOSED.
TELEGRAPHS
CABLE.
CANAL.
RIVERS NAVIGABLE.
CHUNGKING
YO-CHAU
WENCHOW
FUNING
FOOCHOW
AMOY
SWATOW
CANTON
WUCHOW
SAMSHUI
KOWLOON
HONG KONG
BRITISH
MACAO
(PORTUGUESE)
KWANGCHAU WAN
(FRENCH)
PAKHOI
KIUNG-CHOW
HAINAN
MENGTSZ
LANG CHOW
YUNNAN
KWANGSI
KWANGTUNG
FORMOSA
(JAPANESE)
TAIHAN
HUNAN
KIANGSI
FUKIEN
KUEICHAU
YUNNAN
TONGKING
FLAT
GULF OF TONKING
HUE
MANILA
(UNITED STATES)
PHILIPPINE IS
(UNITED STATES)
TO SINGAPORE
TO BORNEO
MANILA TO HONGKONG 618 MILES
KUI-YANG
YALI-FU
CHEN-AN
NANNING
HAIFONG
CHANG SHA

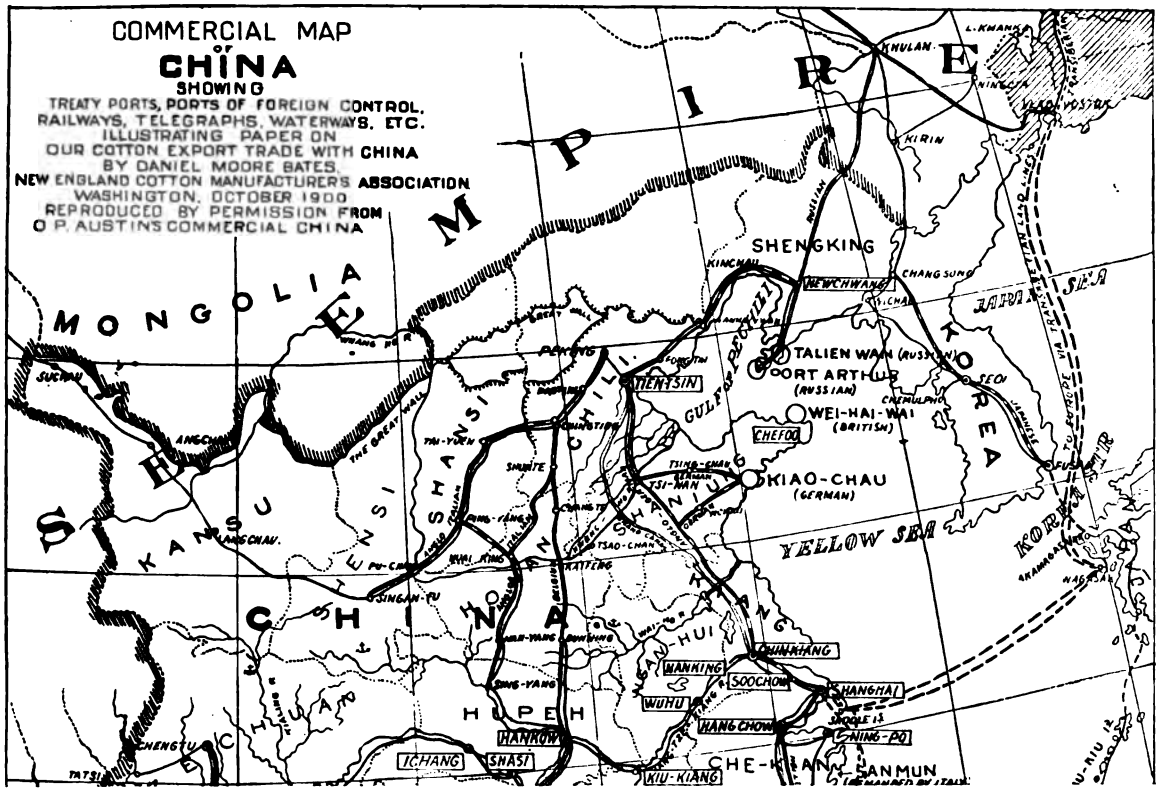
COMMERCIAL MAP
OF
CHINA
SHOWING
TREATY PORTS, PORTS OF FOREIGN CONTROL,
RAILWAYS, TELEGRAPHS, WATERWAYS, ETC.
ILLUSTRATING PAPER ON
OUR COTTON EXPORT TRADE WITH CHINA
BY DANIEL MOORE BATES,
NEW ENGLAND COTTON MANUFACTURER'S ASSOCIATION
WASHINGTON, OCTOBER 1900
REPRODUCED BY PERMISSION FROM
O. P. AUSTIN'S COMMERCIAL CHINA
MONGOLIA
CHINA
KOREA
SHENGKING
NEWCHWANG
TALIEN WAN (RUSSIAN)
PORT ARTHUR
(RUSSIAN)
WEI-HAI-WAI
(BRITISH)
TIENTSIN
CHEFOO
KIAO-CHAU
(GERMAN)
YELLOW SEA
JAPAN SEA
SHANGHAI
NANKING
SOOCHOW
WUHU
HANGCHOW
NING-PO
HANKOW
ICHANG
SHASI
KIU-KIANG
CHE-KIANG
SANMUN
CHENGTU
SINGAN-FU
TAI-YUEN
PAO-TING
KIRIN
HULAN
SUCHAU
LANGCHAU
THE GREAT WALL

So it seems that while both North and South are largely interested, the Southern mills depend in many cases for their very existence on the China market.

POSSIBILITIES OF DEVELOPMENT.

When we look to the future, the opportunities of trade expansion seem great beyond all comprehension. Speaking of China's possibilities JOHN BARRETT says:

"China has now an annual foreign trade of only $250,000,000, or not $1 per head. If we apply the six-dollar rate per head of Japan or the ten-dollar rate of Java, we have, in using 250,000,000 as the most conservative estimate of China's population, the reasonable figures — when China shall be thoroughly opened and her government reformed and strengthened like those of Japan and Java — respectively of $1,500,000,000 and of $2,500,000,000; for all experts agree that under like conditions the buying and selling capacity of the average Chinaman would equal that of the Japanese or Javanese. At the present moment America's exports to China do not exceed through all channels, including Hong Kong, $30,000,000, while the official figures are still lower. If we look over the list of China's imports we will find that over half of them could be supplied by the United States in successful competition with other lands, which fact applied to present imports of $175,000,000 should make our share over $115,000,000, or if applied to future imports of $750,000,000 (the half of the first conservative estimate of total trade) the splendid sum of $500,000,000."

Referring to the cotton trade in particular, Mr. BARRETT predicts an export trade of $12,000,000 in 1900 and of $30,000,000 at least in another ten years. Last year this trade amounted to nearly $9,000,000. He states that in Northern China, our great cotton market in the Far East, not more than one-thirtieth of the population has yet been reached and that "if the entire field shall ever be covered, it will require all the cotton mills in the South to supply the demand."

These figures seem enormous. But to realize them there is one important feature that must not be overlooked. One requisite for a satisfactory purchaser is his ability to pay for what he

gets. It is only by the opening up and development of his country that the Chinaman can pay for the necessaries and luxuries which the "foreign devil" is so ready to supply. On the other hand this development will, among other things, bring into China large cotton mills, introducing a new element into the competition to be reckoned with. Already it is reported of the mills around Shanghai "that they are active and stubborn competitors, and that, having come, they will in all likelihood stay."

Since the conclusion of the war with Japan we see a trade expansion so immense as to make an entirely new epoch in the commercial history of China, an epoch that cannot be compared with any period preceding. The commercial treaty between China and Japan in 1896, applicable through "the most favored nation" clause to all the important treaty powers, opened up many ports and waterways in the interior, conferring trade rights hitherto unknown. Add to this the throwing open of inland waters to steam navigation in 1898, and we have some concrete explanation of the forward trade movement the past four years.

What then may we expect when China, no longer dependent on her waterways for communication, is gridironed with railroads? Already Pekin, Tientsin and Shanhaikwan have rail connection and this will soon be extended to Newchwang, while the projected Russian connection of Port Arthur with the Trans-Siberian railway is now in course of construction. If present railway projects are carried out there will be an important trunk line running from Hankow, the "Chicago of China," on the Yangtse, directly north to Pekin and south to Canton, the first part being built under Belgian, the second under American auspices; there will be a main line north from Shanghai to Tientsin and thence to Pekin, built by Anglo-German capital; and two other lines solely under British control connecting Hong Kong and Canton directly with Shanghai and with the western province of Szechuan, respectively. If British aims are not thwarted even more will be done, for it is planned to extend the British line in Burmah from Mandalay to Kunlon-Ferry on the Chinese border to join a line from there to Chungking, the head

of navigation on the Yangtse. This line would cross the British line from Szechuan to Hong Kong, establishing direct rail communication between St. Petersburg and India, through Siberia and China. At present China has not even highways worthy of the name of roads, her wayfarers often driving their beasts of burden along tracks through fields of grain, where the farmers' only protection is to construct pitfalls to turn traffic another way. Think of these great trade arteries to be, and then of the present means of overland travel, and form your own ideas of China's future trade expansion.

Hand in hand with this railway development will come the reorganization and the regeneration of the Chinese government. Lord BERESFORD emphasizes the fact that the first thing to be accomplished is the establishment of an efficient military and police to inspire confidence and to protect life and property. The abolition of the troublesome "likin" taxes which cause endless friction between foreign and provincial officials, corruption between the imperial and provincial governments, and so much downright obstruction of trade, must follow. The nature of this likin tax is clearly set forth in the following extract from "Commercial China", published by the Treasury Bureau of Statistics.

"The Chinese Government, while it collects a part of its revenue from customs, relies largely upon the provinces to supply revenue, and arbitrarily names each year the sum which each province must supply, leaving to the officers of that province the methods by which this is obtained. The consequence is that each province is permitted to collect a tax on goods entering it from the adjacent provinces, and this custom has been extended to the subdivision of the provinces, so that goods in transit are frequently compelled to pay taxes every few miles. As a consequence, the interior taxes, know as "likin", became not only the terror of importers, but sometimes almost prohibitory. So serious was this system in its effects upon attempts to introduce foreign goods that, upon the insistence of foreign ministers, the Chinese Government announced that an addition of 50 per cent. to the rates paid at the custom-houses would insure passage of the goods to any point in the interior without the exaction of likin taxes. This was gladly accepted

by foreigners desiring to do business in the interior of China. The additional 50 per cent. on duties was paid and "transit passes" issued for the goods in question, purporting to authorize their free transit to any point in the Empire. Actual experience, however, shows that these transit passes do not always accomplish what was expected. The local authorities in many cases refused to recognize them, insisting upon their right to raise revenue, since the additional revenue paid at the custom-house goes directly into the treasury of the general Government, while in other cases, where the likin is not insisted upon, local taxation is imposed in other forms; so that there are still obstacles to internal traffic through the vexatious likin and other systems of local taxation."

FUTURE OUTLOOK.

Disinterested authorities agree that more can be accomplished with the Chinese people themselves by governing through a strong central Chinese government than by the division of the Empire into "spheres of influence", or into areas of actual sovereignty, not to speak, in the latter case, of the hampering of trade through the jealousies and complications in jurisdictional matters which must inevitably arise between the different occupants.

The vital point which must be safeguarded if the bright future for our trade is to be realized, is the policy of the "Open Door".

Speaking of these matters Mr. BARRETT says,

"The unfavorable side of this mighty opportunity is largely confined, first, to the methods of governmental administration that now obtain, and, secondly, to the apparent policy of certain foreign powers to establish spheres of influence and close the door of trade to us. * * *

Of the latter, it bids fair to so seriously limit the wide field of American trade that the great permanent and vital value of open Chinese markets will be lost to us unless such steps are taken as will effectually protect our interests, guaranteed by both the old and new treaties with China, which say that America shall have the same rights of trade everywhere as any other foreign nation. * * *

The 'open door' means nothing more or less than that no one or more nations shall enjoy any special or privileged rights of trade over others. It does not mean, as often believed by those unfamiliar with

the question, 'free trade' or absence of customs duties, but merely freedom of trade without favoritism. 'Spheres of influence' are sections where one country exercises that paramount influence which practically forbids any other country from operating, either materially or politically, within its limits, without permission or acquiescence of the paramount power. * * *

In the various alleged spheres, the control of the favored or paramount power over material enterprises like construction of railroads and opening of mines, as outlined in agreements with China, is in many instances so plainly expressed that it means nothing more or less than that no other country can operate there and no valuable concessions can be given to other than the paramount power. This is quite true of most of the Russian sphere in Manchuria and of the German in Shantung. Here the open door of material effort aside from trade is practically closed. * * *

The spheres so far recognized in discussion and consideration of China are that of Russia in Manchuria, coming down to the Gulf of Pechili with the ceded ports of Port Arthur and Talienwan, together with Newchwang and almost, if not actually, including Pekin; that of Germany in the promontory and province of Shantung, with the ceded port Kiaochau on the south, but not including Chefoo and British Wei-hai-wei on the north side; that of Great Britain in the Yangtse Valley, of which the great port is Shanghai, where all nations are represented; that of Japan in the province of Fukien, opposite Formosa, and in which are located the ports of Amoy and Foochow; and that of France in southern Kwangtung, Kwangsi, Yunnan, the southern part of the Sekiang, or West River Valley, and including Hainan, with the ports of Pakhoi and Kwung Chow. Great Britain also has a great interest in the West River country, of which Canton is the capital, because Hong Kong is located at its mouth and practically controls its trade. If the Italians should secure San-mun they would probably claim the province of Che Kiang."

The present disturbances in North China, while upsetting our trade for the moment, will be but a ripple on the surface and in the end will make for good if they bring about the reorganization of the Chinese government as above indicated. If, on the other hand, the Boxer rebellion leads to the division of China into "spheres of influence", our trade is bound to suffer. In

this case Manchuria and Northern China, including our two great distributing ports of Newchwang and Tientsin, would come under the sway of Russia; Chefoo, the third great center for our goods in the North, under Germany; while the Yangste Valley, in which our trade is at present insignificant, would be the only sphere controlled by a foreign power on whom we could rely to afford us the same trade privileges we now enjoy. With the integrity of China maintained, and our present treaty rights preserved, there is no reason why America cannot gain the lion's share of trade. The returns from year to year show that we can more than hold our own in competition on equal terms. Russia at present writing occupies Newchwang, though under pretext of military necessity, and has promised to withdraw. If she at any time openly declares her sovereignty over what she already has largely absorbed — the whole of Manchuria and Northern China — our growing trade will soon be cut off by Russian imposts. As Mr. FOORD, Secretary of the American Asiatic Association, clearly puts it,

"There are two great Powers, Russia and France, whose interests impel them to work for the division of China into zones of exclusive commercial influence, if not into zones of actual political and military control. Neither of these nations produces anything which China needs, in great quantity at least, which cannot be more cheaply produced by its rivals. An open market in China, therefore, means for them next to no market at all, and their influence is necessarily thrown on the side of fencing off markets by the aid of a protective wall of customs duties."

This is Russia's traditional policy not only at home but abroad. It has been illustrated by her acquisition of the Khanates of Central Asia, by her career in Persia, and — what more nearly concerns us — by her recent endeavors to isolate the port of Newchwang in projecting her railway to Port Arthur some miles to the east, and to prevent by all means in her power the extension of the Tientsin-Shanhaikwan railway to Newchwang. Russia is only now building around Talienwan, which she agreed to hold as a "free port", the town of Dalny, so that all goods en-

tered at Talienwan will have to pass the Russian imposts before they are brought into the interior. These instances are only a few to show the general trend of Russia. With Russia the acquisition of territory is different from that of any other nation. The Russians are actuated not merely by love of gain, not merely by patriotism, but also by *religion*. To stretch out as far as possible, to "russify" all the world within reach and make it in heart and soul a living part of Holy Russia, is the Russian's aim. What then can we expect from Manchuria, from Northern China, possessed by such a power?

For the immensity of the subject this paper is necessarily brief, but its salient facts need no enlargement to make their deep significance appreciated.

Our total export trade to China has quadrupled in five years.

Our cotton exports have more than trebled in the same time.

Our cottons comprise two-thirds of our total exports.

Nine-tenths of all these cottons go to Manchuria and Northern China.

Only one-thirtieth of this northern market has yet been reached, not to mention the rest of China.

Shall our Southern mills continue to supply this market, or shall it be turned over to the mills of Southern Russia?

Secretary HAY clearly defines our Government's position in the present crisis:

"The policy of the Government of the United States is to seek a solution which may bring about permanent safety and peace to China, preserve Chinese territorial and administrative entity, protect all rights guaranteed to friendly Powers by treaty and international law and safeguard for the world the principle of equal and impartial trade with all parts of the Chinese empire. In other words, the United States Government is opposed to the partition of China and asserts that it has the right to a voice in the settlement of China's future."

Gentlemen, our Secretary informs me that this is distinctively a Southern meeting. If so, no question has more urgent claims upon you than this. If you value what you have earned for yourselves, see to it that in the coming settlement in the Far

East your influence sustains our government in an unflinching stand for the integrity of China and the "Open Door".

In closing I wish to acknowledge the kind assistance of the Philadelphia Museums, of Mr. JOHN FOORD, Secretary of the American Asiastic Association, and of Mr. O. P. AUSTIN, Chief of the Treasury Bureau of Statistics, in the preparation of this paper, and to thank them for their courtesy.

The PRESIDENT. The next subject is Friction Clutches, by Mr. RICHARD H. HILL, of Boston.

FRICTION CLUTCHES.

RICHARD H. HILL, M. E., Boston, Mass.

In presenting this paper to this Association, it is not with the object of bringing to its attention any particular make of friction clutch, the article being a simple statement of facts that have come under my observation during the past twenty-five years' experience as patentee, manufacturer and engineer in this particular line. I trust the data herein given may be of some practical value to any of you who may be interested; and every manufacturer should be interested in a good friction clutch properly installed and constructed for the duty required of it, for the simple reasons that it is a good investment and a great convenience. I am frank to state, however, that I have met a number of manufacturers who have been interested in friction clutches to their sorrow; in fact there may be some gentlemen before me today who have been through this experience and firmly believe no good can come out of Clutch-land.

They may tell you a friction clutch is a useless expenditure; they positively know it, have been there. Allow me to tell you how, in all probability, they got there. We will assume that the manufacturer is an alert, energetic business man, always on the lookout for anything that will reduce the cost of his production. He learns that his neighboring manufacturer has introduced a system of friction clutches in his mill which has proven very satisfactory, there being quite a saving of coal and wear and tear of machinery. He learns that each room in his neighbor's mill is controlled by a friction clutch, by means of which the machinery in any one of the rooms can be stopped

without shutting down the entire mill. He sees his way clear to run certain departments overtime, to get out rush orders without running the entire plant. He sees, for instance, that he can save a few hours' running of his picker room; further, should an accident happen in any particular room, such as the breaking down of a machine or the parting of belting, or incidentally should some operator be so inconsiderate of his own welfare as to get mixed up with the machinery, the throwing out of the friction clutch that controls this room will prevent the shutting down of the mill and perhaps save the life of some good cloth maker.

Our manufacturer is undoubtedly a good mill man as well as financier. He spends considerable time in his mill and realizes that accidents of this kind are bound to occur. After following this line of thought for several days, he decides that the clutch idea is a good one and calls in his various foremen to talk the matter over. Of course, they usually think just as he does. The old man machinist, who is doing some light job around the office at the time, probably overhears what is proposed to be done. He dare not on his life speak up in front of the big fellows, but at the first opportunity sneaks out of the office to find his apprentice and tell him the wonderful things that are to happen. No one realizes more than this machinist, usually the repair hand, what a hard job it is to please all people at once and the time when it tests his patience, and in fact the patience of the whole outfit, is when he is called upon to disconnect the jaw clutch that runs say mill No. 3, and put the bolts in the old Dutch coupling that is used to couple up the engine and water wheel, when the water goes low on the dam. Do his best, the mill will be shut down half an hour, and everybody thinks he ought to do it in less time.

This method of connecting and disconnecting power is about on the line of taking off the engine belt. It is effective, but takes too much time. Owners of mills today, rather than lose this time, will use an engine to turn a water wheel when the water is low. The worry of this part of his job has probably

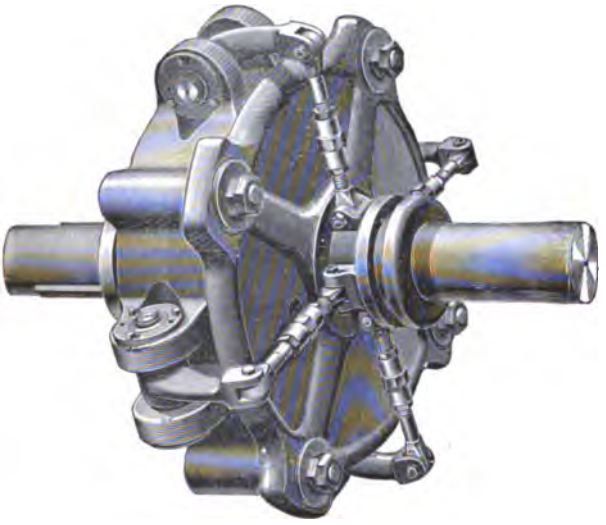

FIG. 1.

VIEW OF CLASS A OR HUB TYPE OF FRICTION CLUTCH CUT OFF COUPLING

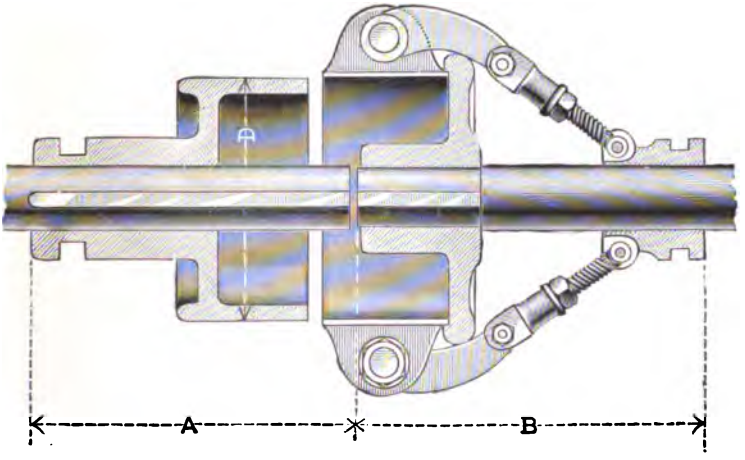

FIG. 2.

SECTIONAL VIEW OF CLASS A OR HUB TYPE OF FRICTION CLUTCH CUT OFF COUPLING WITH HUB DRAWN OUT.

FIG. 3.

VIEW OF CLASS B OR RIM TYPE OF FRICTION CLUTCH CUT OFF COUPLING.

made the old machinist gray, and when it dawns upon him that a good friction clutch, properly installed, will enable him to do this much dreaded job with ease and comfort in a very few minutes, he tells his apprentice and actually puts it into figures what a big saving it will be for the "boss" if the customary half hour shut down is done away with.

Our manufacturer now probably goes a step farther. He realizes the loss is nearly an hour by the time operatives get back to their machines and everything is running in the same good shape as before. This last view of the situation is usually a clincher. The jaw clutch and Dutch coupling were installed because they were cheap, that is, the first cost, but he begins to see that they have been a dear investment. Getting confidential with the boss weaver, he remarks, "Tom, I really believe those two old couplings down stairs have cost us the price of that new engine and water wheel we want so badly. Why didn't we get at this clutch business before, and to think those fellows over the way should get ahead of us. One thing though, they don't know how to buy over there. The agent put the whole outfit into an engineer's hands, giving him full swing to put in whatever he thought best. I was talking with one of the directors of their mill the other night, who said it cost them a pretty penny. Now, Tom, I want you to see their boss carder, find out how the trick is done, and I will buy the clutches. Our machinist will fit them up and we will show those fellows how to save money."

This is just where the manufacturer made a big mistake and when "friction clutches" are mentioned within earshot of him, it is like raising a red banner before a bull. Had he done as his neighbor, called in the services of some honest fellow who was competent to advise him as to his particular wants, he would have been just as contented with life as his neighbor and would have thought a friction clutch was blessed instead of, well, otherwise, as he now does.

A few hints as to the most desirable construction in a friction clutch, for the duty required of it, may not be amiss. The most

extensively manufactured friction clutches today can be divided into four classes. These, which we can designate classes A, B, C and D respectively, are illustrated in the accompanying sketches.

Class A clutches are what are known to the trade as "Band" or "Hub" clutches. Of this type there are a variety of makes. A drum or hub forms one part, which is surrounded by a band or brake strap held in position by the other part of clutch. The tightening or loosening of this brake or band by levers or screws, connects and disconnects the two parts of the clutch, the frictional surfaces being between the inside of brake or band and the outside of the hub or drum. This clutch, if properly constructed and proportioned, can be made to swing in a very small diameter and yet be exceedingly powerful, but it requires considerable room on the shaft. The shaft should be made heavy for overhang. The clearance between the frictional surfaces necessarily being limited, it is necessary to withdraw the drum or hub from under the clamp or brake to avoid the rubbing or chafing of the frictional surfaces. It has been found that clutches of this description give the best results by using metal surfaces, having the frictional surfaces well lubricated when picking up the load. These clutches require careful mechanical attention and with this given, good results are obtained. They are well adapted to places requiring a large amount of power at moderate speed, and also to cut out long lines, the sliding drum taking the place of an expansion coupling.

Class B clutches are known to the trade as the "Rim" type. A ring of considerable diameter, finished upon the inside and outside, having arms and a hub similar to a pulley, forms one part of the clutch. The other half of the clutch is provided with jaws shod with wood which either swing on a pivot or by sliding in guides grip the ring on both sides. It is usage in this clutch to use large diameters in order to get the necessary leverage to transmit the required power, and as the friction surfaces are keyed under each other, a greater clearance has to be allowed. This clutch can be so constructed as to take up

FIG. 4.

VIEW OF CLASS B OR RIM TYPE OF FRICTION CLUTCH CUT OFF COUPLING WITH THE RIM PART REMOVED.

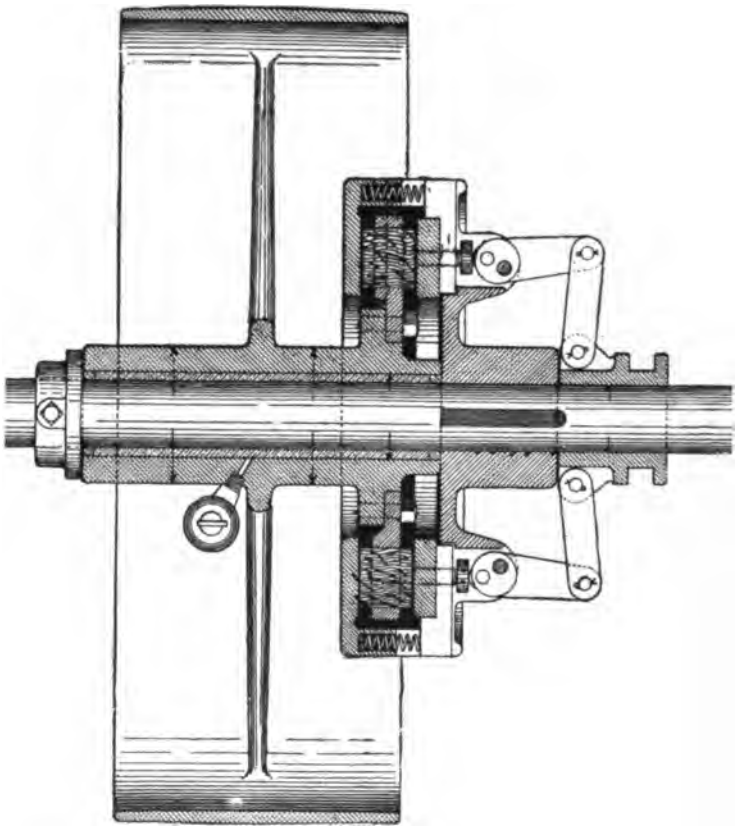

FIG. 5.

SECTIONAL VIEW OF CLASS C OR DISC TYPE OF FRICTION CLUTCH AS APPLIED TO A PULLEY.

very little room on the shaft, which is a very desirable feature for some situations. They do not require quite so careful mechanical attention as the hub type, and should the friction surfaces give out, they can be renewed quite easily while the clutch is in position, it not being necessary to take it to a machine shop for the repairs.

The two foregoing types of clutches, while they can be used as clutches for friction pulleys, are beyond doubt best adapted for friction clutch cut-off couplings, connecting two shafts. The freedom of end movement which all good running shafts should have and the expansion and contraction of the shafts caused by changes in temperature, will not affect them. This is particularly true of the Class A construction.

Class C clutches are known as the "Disc" type. In this clutch the frictional surfaces are at an angle to the shaft, not parallel, as in the case of Class A and Class B. Some makers, however, shoe these surfaces with wooden blocks, having loose fit in the head, which makes the clutch elastic. Where this is not done, or some similar provision made and metal frictional surfaces are used, it being difficult to oil said surfaces, there is a liability that clutch will heat when one part is running and the other part is idle. This is particularly true where it is used as a friction cut-off coupling to connect and disconnect shafts. The end movement of the shafts has a tendency to bring the frictional surfaces into contact, causing abrasion and a tendency to heat. These clutches are best adapted for friction pulleys to be used on counters, the springs used to separate the frictional surfaces when thrown out generally keeping these surfaces separated, as they have a limited body to move. As a rule, these clutches can be made for less money than other types and under the proper conditions can be used with good results.

Class D clutches are known as "Expanding" type, sometimes nicknamed "Hat Stretcher." This type and the old pan friction clutch are among the old types known and some of them have been developed to a point where good results can be obtained from them. One of the objections to them is their heavy weight.

If the friction slips, the outside part heats and enlarges and will continue to slip more and more. I have in mind a plant where this style of clutches was installed, the clutches being a little too small for the duty required of them. When the load came on heavy during a part of the day, and the clutches began to slip, the engineer would turn the water on them, cool down the outside and in this manner would get through his run. Where the simple pan clutch is used, the end thrust is quite an item to be considered, and there is a liability of the frictional surfaces sticking.

In this brief article, it would be impossible to touch upon all the different classes of clutches. There are hydraulic and pneumatic frictions, many of which, from the theoretical point of view, have claims of excellence, but after all is said and done, to construct a good efficient friction clutch of any class requires a great deal of patience of the cut and try order until the parts are so constructed and balanced that the clutch will back up the principle involved and when put on the market it will not be a source of annoyance on account of the weakness of some apparently unimportant part.

I would advise that when you get your clutch, be sure it is fitted by a careful and exact machinist who is well acquainted with the clutch in hand. Provide solid, substantial foundations, and in the case of large friction cut off clutches, use a connecting bed plate for the bearings on each side of it, and when it is erected, be sure the shafts are in perfect alignment and that they will be held there.

The growth of the friction clutch industry has, like many other good things, been phenomenal. It is my firm belief that there has been manufactured and put upon the market a larger value and greater number of friction clutches in a single day in this year, 1900, than was produced in the whole year of 1875.

The general introduction and use of electricity has been largely responsible for the increased demand for first class friction clutches. The high speeds at which they are invariably run in electrical generating plants, and the extremely severe duty re-

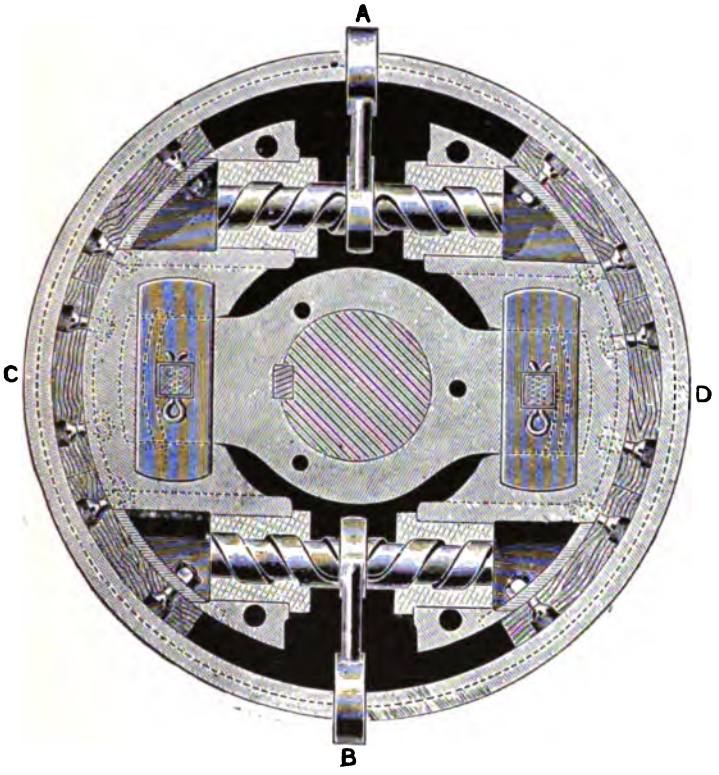

FIG. 6.

END VIEW OF CLASS D KNOWN AS THE EXPANDING TYPE.

quired of them for this class of work, has brought out the best efforts of our mechanics in producing satisfactory running clutches. It has been one of the best advertising mediums of the friction clutch business, and has, in many instances, shown to inquiring minds the advantage of the adoption of friction clutches in other channels of work.

It is an accepted fact that no first class builder of machine tools, or of any other machines that need to be stopped and started frequently, does not find it to his advantage, as well as to his customer's, to use friction clutches to operate the said tools or machinery. Compare the ordinary engine lathe, built on modern lines, having a good friction clutch pulley countershaft, with that old annoying arrangement having a jaw-clutch pulley countershaft. The slam-bang noise of one of these pests when in use in a shop is enough to put the men's nerves on edge, to say nothing of the hard labor and skill necessary to operate it and the liability of spoiling the work in hand. The trials of operating one of these old jaw-clutch devices is enough to make one want to send the fellow who had nerve enough to make it, to the place where St. Peter sent the man who gave him lessons on the bicycle.

Go a step further and compare the modern friction clutch pulley countershaft with the old tight and loose pulley affair with its shifting, sluggish, squealing belt, which is continually wearing out and breaking down. Note the ease with which the operator controls the machine having the friction clutch device. He can do more work, better work, with less exertion and less wear and tear on the machine and belts. Yet it is not such a long time since the manufacturer, and even the operator, thought the old jaw-clutch or tight and loose pulley device on a lathe was pretty good. The fact is, they did not know of anything better.

It is human nature to judge by comparisons, and the enlightenment in the use of friction clutch devices, their advantages on a lathe counter or any other machine, is the reason of the ever increasing demand for the many thousands of friction clutches manufactured annually and the enormous increase in the number of willing buyers.

The PRESIDENT. The next paper will be on the subject of New Methods of Combing Cotton, by Mr. H. G. MCKERROW, of Boston.

The SECRETARY. Mr. President, before Mr. MCKERROW reads his paper, I wish to explain the inconsistency between his appearance and the name on the programme. Mr. E. W. ATKINSON was to be the author of the paper, but a short time before leaving Boston I received a note from him regretting that the pressure of business had prevented him either from preparing the paper in manuscript, or appearing at this meeting to deliver it in person, and while on the trip to Washington, Mr. MCKERROW agreed to present a paper on the same subject from his own point of view, and in that manner saved the programme to a consideration of those subjects which were published.

Mr. H. G. MCKERROW. The title of this article is not of my own choosing, as Mr. WOODBURY has told you, as I am in a sense a volunteer at the eleventh hour, and the few remarks that I have prepared are, I think, entitled to some consideration as being rather hastily constructed.

NEW METHODS OF COMBING COTTON.

H. G. McKerrow, Boston, Mass.

The title of this article is not of my own choosing, and I am in a sense a volunteer at the eleventh hour. Combing being so purely a mechanical process, this title necessarily prescribes the more or less minute description of some particular machine, and as the machine I am specially interested in this connection in, is the new combing machine built by A. Monfort of Munchen-Gladbach, Germany, and as this machine is not yet known on this side of the water, I venture to place before the Association some facts and particulars concerning it.

The Monfort comber is essentially an item of evolutionary development. It is not an invention, or an inspiration, but a carefully nurtured growth.

The history of cotton machinery during the past century has been punctuated at intervals by the production of some epoch marking machine, which, while it has had the appearance of being the sudden inspiration of genius, has, in reality, been the combination of multitudinous steps, and years of patient labor. It has been the coming into sight of the slow built reef, and the immeasurable degree of unknown individual labor entailed is not apparent, in the result.

One of these epoch marking machines was the revolving flat card and the improvements effected in this machine and in its work have unquestionably withdrawn attention for many years from its twin brother, the comber.

The five or six well known makes of combers, English and American have all been on the Heilman principle, and this with

the limitations to which it has been subject, has been accepted as the recognized standard. Within the last five years, however, there being nothing new in cards further than an occasional improvement of details, inventive talent has again been directed to the comber and there are now on the market two combers, one French and the other German in manufacture, which approach the subject from an entirely new mechanical standpoint and achieve results, both as to quantity and quality which make these machines in their turn, epoch-marking. My friend, Mr. E. W. ATKINSON had intended to give you some information, I believe, about the Mulhouse comber, but as he has been prevented from doing this, I ask your attention to a brief description of the Monfort comber. I shall not attempt to do further than give an elemental and cursory account of principles and results. The primary object of the Monfort comber is to do away with the limitations to which the Heilman is subject, as regards the length of staple it is possible to comb. Hitherto, long staple stock has alone been capable of successful use in a comber and the employment of these machines has consequently been limited to mills spinning fine yarns, and using from 1¼ inch cotton upwards. Below this the revolving flat card has produced a sufficiently clean sliver with fairly parallel fibres, and this has satisfied the yarn trade, but this does not accomplish a perfect separation of the short and long fibres. It is only by the employment of a comber that a perfect yarn, perfect in cleanliness, evenness and elasticity and strength, can be produced. This possibility of perfection is now brought, by the Monfort comber, within reach of the coarsest mills, as stock as low as ⅞ inch in length can be satisfactorily handled. To operate fibres of so low a grade it is necessary to be able to regulate at will the mechanisms which accomplish the separation of the fibre beard from the lap. In the Monfort comber this is accomplished before passing the comb, and by making the separating organs work independently of the combing organs. To attain the greatest possible degree of production without damaging the fibre or unduly straining the more or less delicate parts of

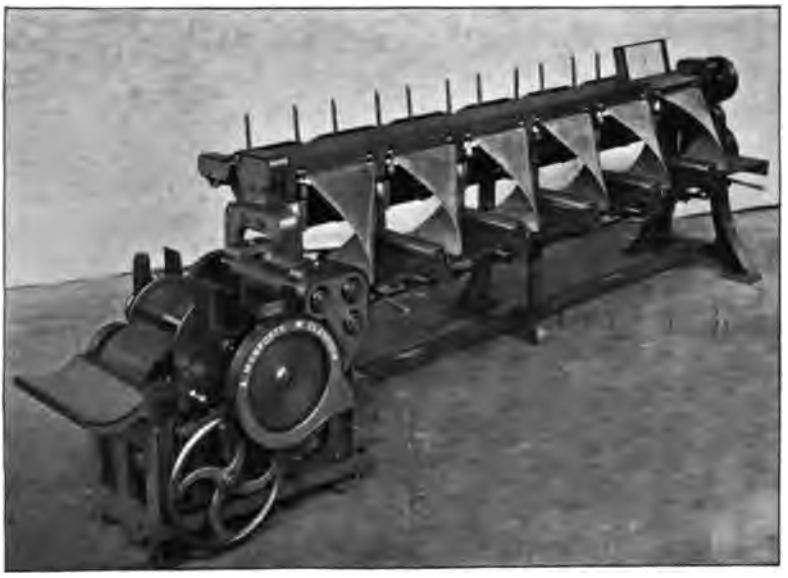

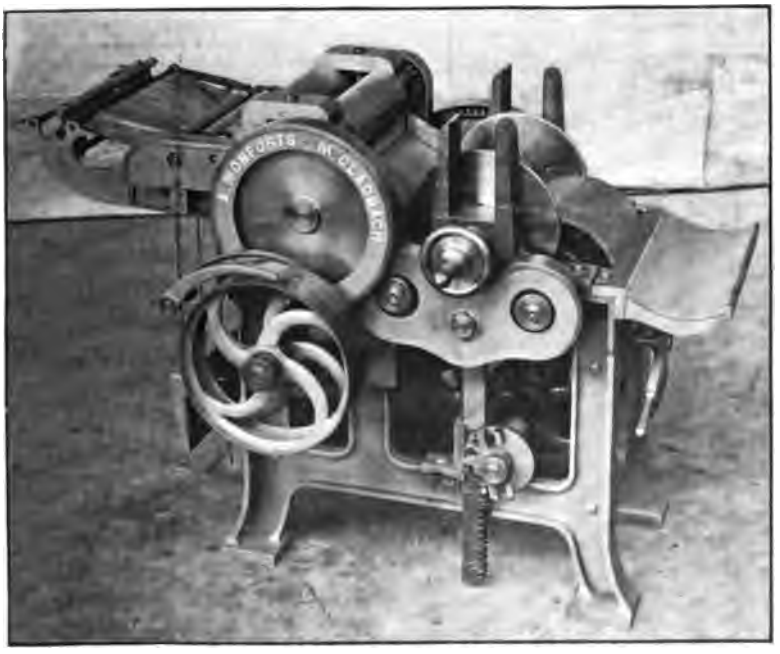
J. MONFORTS - M.G.L. FOHLACH

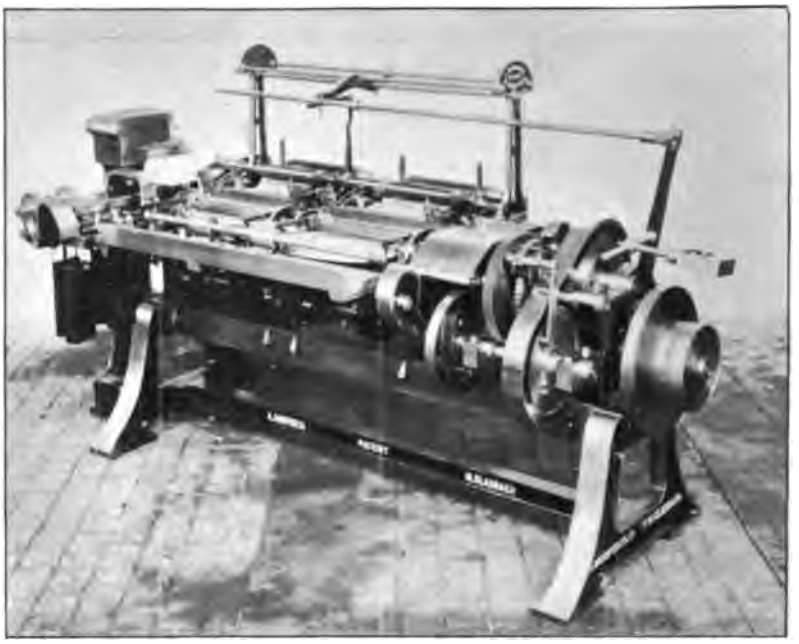

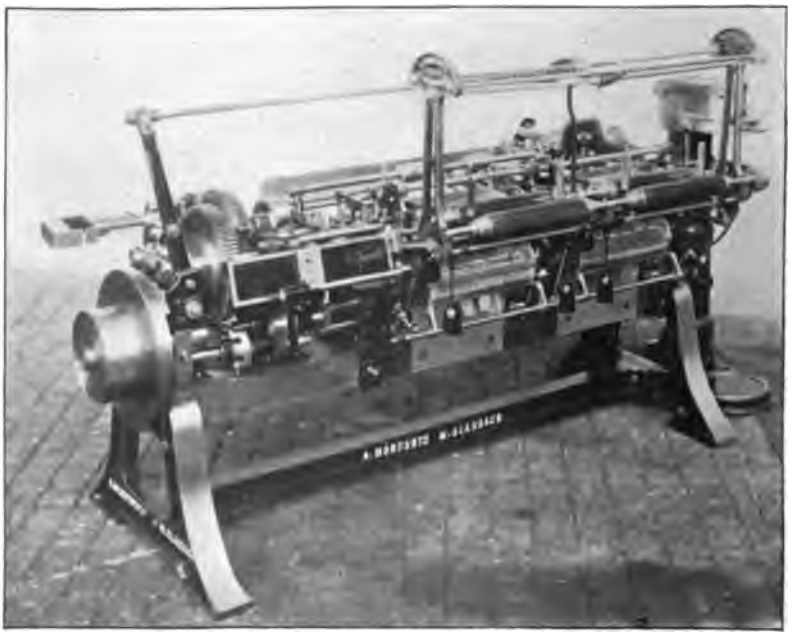

the machine, an ingenious "tearing off" mechanism is employed, which dispenses entirely with the heretofore employed top comb. The fibre beards are thus separated from the lap *before* the action of combing takes place and *without* the employment of a top comb. Thus large fibre beards can be drawn from a heavy lap, and in addition, these are combed singly and evenly on both sides by a number of needles increasing in fineness as the process continues. When the lap used is heavy it is very difficult to produce a sliver which can be drawn finer and finer without an uneven distribution of the fibres. This point is achieved in this machine by laying the fibre beards in equal distances from each other, forming a web or scale similar in form to the shingles on a roof. Thus the web, given such an even distribution of its constituent parts, can be drawn before compression to a perfectly even fleece, which is easily condensed to a thin sliver.

A great advantage is derived from the above mentioned abolition of the top comb. It obviates entirely the breaking of single fibres. Out of a large number of samples of different staples examined under a high power microscope, no broken fibres were found either in the combed cotton or in the waste. The value of the waste is thus greatly increased, as it can be more profitably used again for spinning lower count yarns.

One of the greatest sources of tribulation to the carder, and expense to the mill, in the use of combers, is the breakage of needles. In the Monfort machine this is reduced to a minimum by a simple arrangement by which the needles are set in backs or ribs, which upon the breaking of needles can in a few seconds be taken out entire, to be replaced by a new rib of needles. The machine is built with two deliveries only, each with a lap twelve and three quarters inches wide, and produces from 100 to 110 pounds per day of ten hours, while some of the leading hosiery yarn spinners in Saxony are getting as much as 125 pounds in ten hours, the amount varying according to the number and cleanness of the yarn required.

The machine is generally recommended to be installed in sets,

a set consisting of one sliver lap machine, one ribbon lap machine, and eight combing machines, the whole occupying a space 36½ by 16 feet, and giving an average production of 5,600 pounds per week. The sliver lap machine is arranged for 24 card or drawing frame slivers, and each is provided with a stop motion. The ribbon lap machine has six heads or deliveries.

The proportion of waste can be very closely regulated by a simple device in the headstock and will run from 10 per cent. to 25 per cent. It is claimed, however, that this waste is more valuable by reason of the non-breaking of fibres and the fact that the fibre retains more of the beard for spinning.

SUMMARY.

1. *Quality* is fully as good for coarse as for the finest work. Fibre-beards are laid in form of a scale over each other, assuring a more even web and sliver. Fibre retains more of the beard for spinning, consequently waste is more valuable.

2. *Waste.* No more than from the Heilman, and better in quality, containing less nits and no broken fibres.

3. *Production.* The Heilman with six deliveries will produce 275 pounds for 58 hours, to 300, the highest limit for good work. The "Monfort" has only two deliveries and produces under the same circumstances from 600 to 750 pounds.

4. *Floor Space.* The Monfort takes 7¾ feet by 3½ feet, against 13¼ feet by 3½ feet of the Heilman; therefore, about one-quarter floor space for the production. A full set of eight combers, with one doubler and one ribbon lap machine, gives 5,000 to 5,600 pounds weekly production and takes no more than 36½ by 16 feet floor space.

5. *Power.* Reduced to one-quarter. Each comber is driven by a two-inch belt, on a ten-inch pulley, requiring one-half horse power only.

6. *Cost of Labor.* Reduced to at least one-half.

7. *Repairs.* With any kind of care, none for years. The organs are simple and strong. No spare parts required. Break-

age of needles considerably diminished and these can be replaced by a patent arrangement within a few minutes without taking any of the machine apart.

8. This is the only machine which can work to advantage, staple down to seven-eights inch in length.

9. First cost of investment less than any other system.

The machine is now in extensive use in Europe and in Germany, and a number of the mills are employing it exclusively for the production of extra quality yarns, using short and long American staples as well as Egyptian. These are mills which have a standard reputation for the quality of their yarns. Other mills are combing one inch to $1\frac{1}{16}$ inch good middling, to strict good middling cotton for special hosiery yarns for the Saxony hosiery trade. These are very bright white yarns as compared with those spun from long staples. I have some sample cops of these yarns here, which I shall be glad to submit to your examination.

Some spinners who formerly used $1\frac{3}{8}$ inch carded cotton for their 50-60 warp are now combing $1\frac{1}{16}$ to $1\frac{1}{8}$ inch good middling and above, with the Monfort machine, and claim that their goods look better than they did when made from the higher grade stock. In many mills in Germany only one mixing of good middling one inch staple is used to spin from 8s to 60s, the finer numbers being combed by this machine.

A very profitable business is being done in Europe by combing good middling one inch staple for 10s to 40s, the yarn being even, and looking brighter than the yarn spun from much higher counts.

In some instances the comber waste itself is passed through the machine again and a few slivers mixed in with the other combed cotton without apparent detriment to either the spinning or the quality. In such cases the percentage of waste has been reduced to about 12 per cent. Others are spinning the comber waste from this machine back again into 16–20s warp of good even quality.

This is sufficient to show what is claimed for this machine, and to substantiate the assertion that it is, in its province, as much an epoch marking apparatus as the revolving flat cards or one of the new looms on the market.

It brings within the reach of mills spinning medium and coarse counts, not only in the North but in the South, possibilities in the manufacture of yarns which have hitherto been denied them.

Combed cotton yarns are no longer an expensive luxury, to be indulged in only by fine mills, whose product commands prices which will justify the expense; they are to be obtained by the spinner desiring quality in his yarns, whether coarse or fine, from low grade stock or high grade stock, and from 10s to 200s.

*IMPROVED METHODS OF COMBING COTTON.

E. W. ATKINSON, Boston, Mass.

About two and one-half years ago I had brought to my attention a new combing machine made in Germany which had been, for several years in its experimental stage, and at that time, in 1898, had become a practical success in the cotton manufacturing districts of the Continent. It was, however, little known in England or the United States.

The machine was at once so unique in its design and such a marked further development of the Heilman principle of combing, that it had created a great interest in the cotton combing industry of the Continent. Its creation and development had been accomplished by the united efforts of its inventor, Mr. CHARLES GEGAUFF, and the large works of the *Societé Alsacienne de Constructions Mecaniques*, both of Mulhouse.

Since the invention of the original Heilman comber, years ago, and its practical development by English machinists, there have been a great number of new inventions in combing brought forth, all of which have differed radically in principle from the Heilman comber. While appearing well in theory, they have all failed in actual practice and have, after considerable trial, been finally abandoned in favor of the original Heilman machine.

The Gegauff machine, while being radically different in design and construction from any Heilman comber yet produced, still

* The manuscript for this paper was received after the adjournment and could not be presented at the sessson, and therefore is inserted with this explanation.

—SECRETARY.

embodies all the original principles of Heilman. To these Gegauff has added many new and most important ideas, the application of which has produced truly remarkable results and entitles the inventor to a high rank. That the Gegauff comber differs from the Heilman, will at once be seen by reference to the illustration.

In a floor space of 20 square feet it produces a weight of sliver which would require Heilman machines occupying 60 square feet to equal. A minute description of it will ere long be found in the regular textile papers, taken from a translation of a treatise by Professor OTTO JOHANNSEN, director in the technical school at Reutlingen. This treatise is very exhaustive and extremely interesting, and brings out many facts and theories in relation to the general subject of combing, which cannot fail to prove of great value and interest to manufacturers.

I shall confine myself to a very brief description of the theories embodied in the Gegauff comber and the practical results obtained by it. Mr. GEGAUFF has worked always with one main point in view, viz.: to produce a comber which would turn out the cleanest, most even and most valuable sliver possible; and the dirtiest and least valuable noil possible; also the greatest production of sliver and the least production of noil, consistent with the very best work. He has also built upon the well known fact that the top comb is a most important factor in the proper combing of cotton on the Heilman principle; although this really has but one row of needles (at most two) it does more real combing than any other organ in the machine, as all practical comb fixers well know. The reasons for this will be later referred to.

For the purpose of this short paper, figures 2, 3 and 4 will suffice to explain the working of this machine:

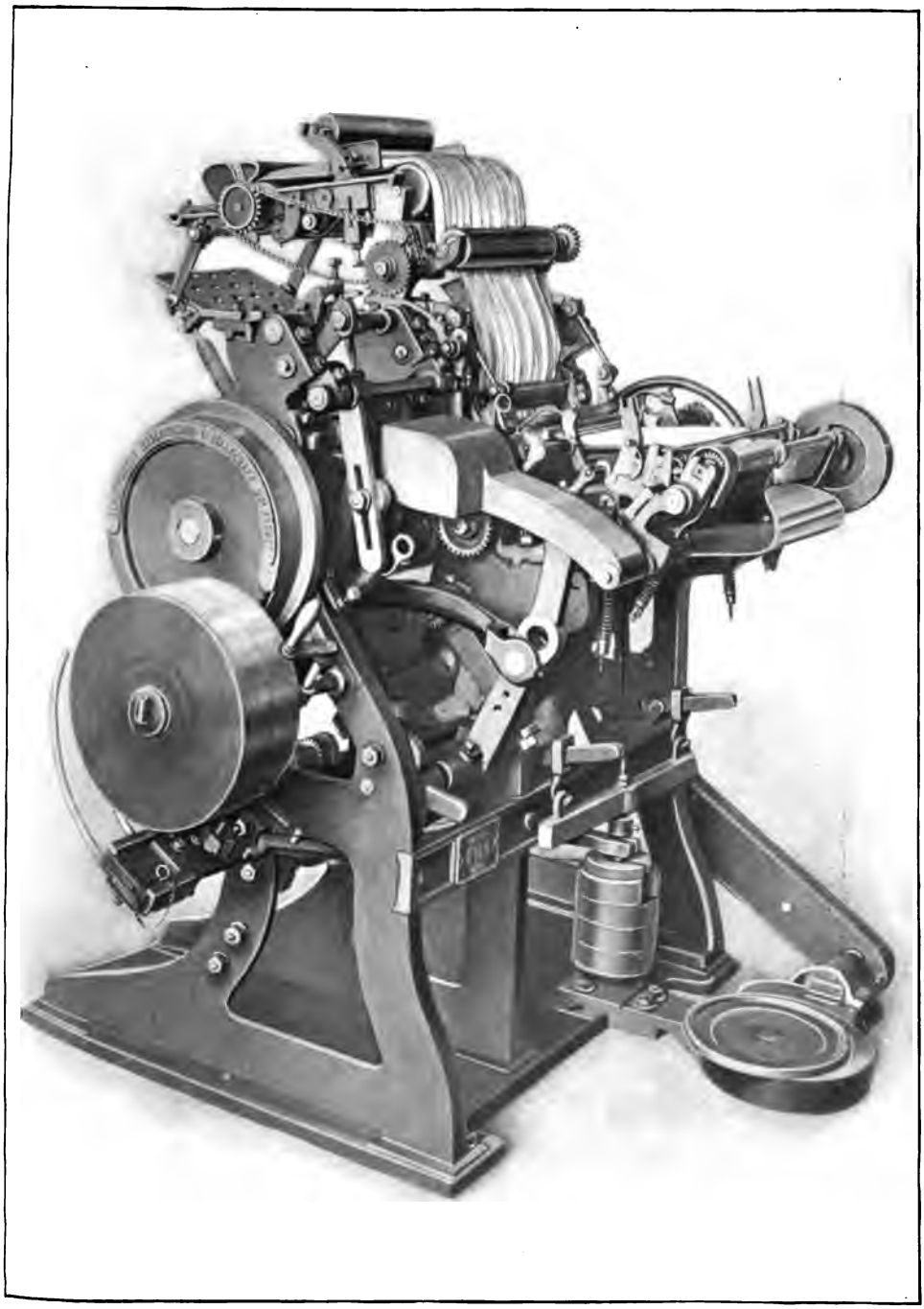

FIGURE 1.

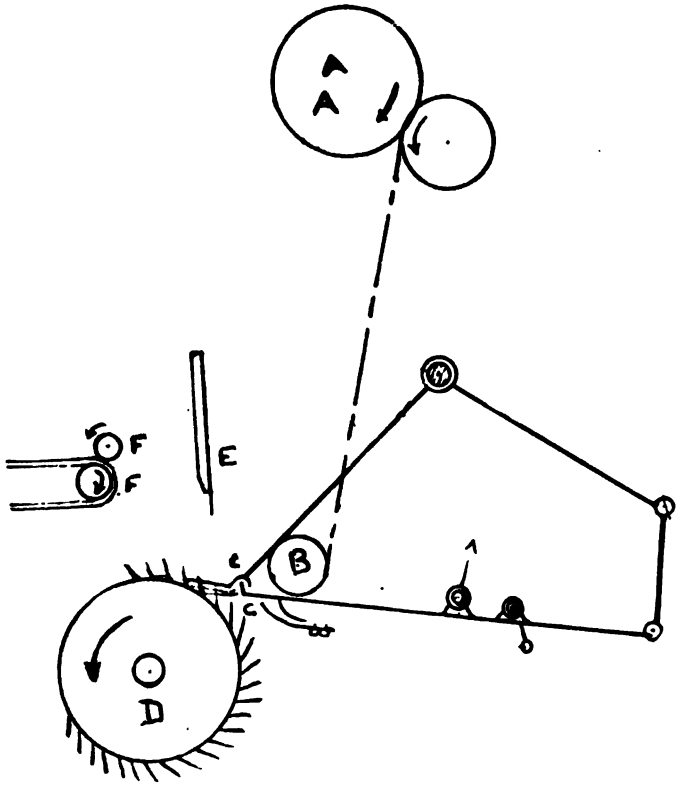

FIGURE 2.

A	represents	the	Lap.
B	"	"	Feed Roll.
CC	"	"	Nippers.
D	"	"	Circular Comb.
E	"	"	Top Comb.
FF	"	"	Detaching Rolls.

No.2 shows the feed stopped, the nippers closed and the circular comb acting.

No. 3 shows the nippers open, the top comb down and the detaching commenced.

It will be noticed that the axis of the circular comb is sta-

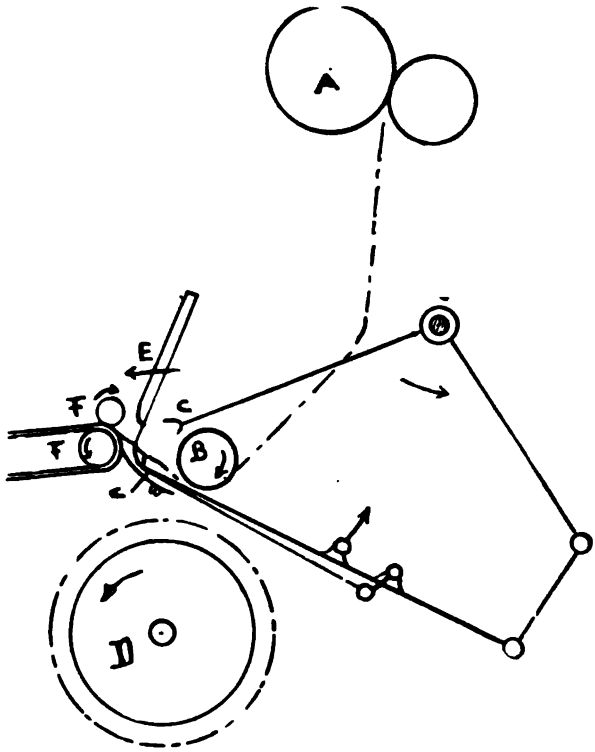

FIGURE 3.

tionary. This also applies to the detaching rolls and lap. All the remaining essential parts of the machine have, however, independent of their separate motions, an oscillating motion altogether forward and back from the circular comb to the detaching rolls and vice versa. The details of the mechanism operating the several motions of the machine I will not enter into; suffice it to say that they are very easy motions, free from complication and most practical in their working.

The designers of this combing machine claim many advantages which may be briefly enumerated.

1st. By separating the detaching rolls from the cylinder and avoiding the fluted segments, the cylinder can have a circular

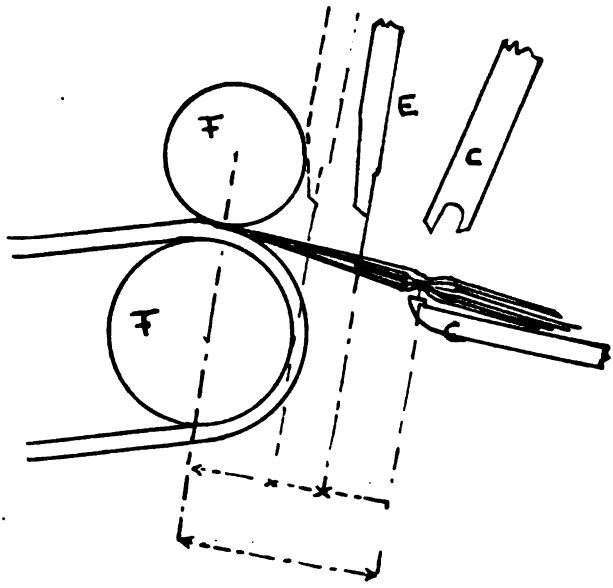

FIGURE 4.

comb upon it, with many more rows of needles than is possible upon any other machine.

2nd. When the top comb falls the beard is free from the cylinder, and the top comb falls clear through it. On the Heilman machine it has to stop before the end of the needles reach the segments, and thus there are always some fibres in the tail on the Heilman comber that do not pass through the top comb or get properly cleaned.

3rd. Moreover, the top comb does not have to wait before falling. As a matter of fact, it falls through the fibres as near to the front end on the German comber as it does to the tail end on the Heilman machine; thus the fibres are in large proportion actually double combed, first by the cylinder and then by the top comb.

4th. The above described arrangement enables the use of an extremely heavy lap, 2,000 grains per yard, or 6½ times as heavy as can be used on any Heilman machine.

5th. Mr. GEGAUFF maintains, and with correctness, that in any machine which is capable of handling it, the heavier the lap the better will be the combing, as the weight and thickness of the lap is in itself a great advantage in the combing process. This is really one of the most interesting points developed upon this comber.

No doubt every one familiar with cotton has many times noticed that when he desires to get a correct and clean staple of a sample in the usual manner, the thicker the bunch of cotton held between the thumb and finger in one hand, the cleaner will be the staple drawn from it by the other hand. This is due to the natural combing of the small amount of staple drawn off by the one hand from the thick mass of cotton in the other, and this combing is produced by the rubbing of one fibre against its several neighbors. This idea is put into practice in the Gegauff comber, the lap being of such a heavy weight and so firmly held when the detaching takes place, that there is a very large amount of what may be termed the natural combing of the detached web done by the fibres of the lap itself.

The impurities thus left behind in the front portion of the lap come forward on the next feed motion, and are most thoroughly combed out by the great number of rows of needles in the circular comb.

6th. A further great advantage of no little moment, is the fact that the arrangement of this comber permits the detaching rolls themselves to be made with a slighly spiral fluting (an impossibility on the Heilman comber). This enables a very wide lap to be worked with success, inasmuch as by this means there is at any one time only a portion of the web being actually detached. On the Heilman comber it all has to be detached at once, the fluting being necessarily straight, and this makes the use of very heavy weights on the detaching rolls unavoidable; also as the diameter of the detaching roller is limited by the length of the staple of cotton, it has always been a great difficulty on the Heilman machine to work the wider laps up to 10½ and 11 inches, because no detaching roller could be found that

would stand the strain of the weighting without deflection. There have been many make-shifts to get over this point on the Heilman comber, and none know the weaknesses of these as well as the machine makers themselves.

On the Gegauff machine, owing to the spiral fluting, there is only one point of the web being acted upon at a given moment as stated above; therefore, only comparatively light weights are needed at the ends of the roller, which can be made also of a very small diameter.

7th. A further advantage of this detaching roll, and one of great importance, is the manner in which it lays the web on the

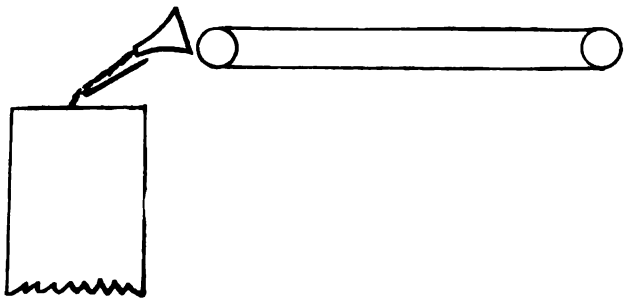

FIGURE 5.

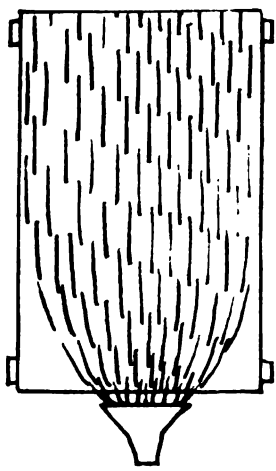

FIGURE 6.

apron. It does this in such a way that the piecing is absolutely even and the usual breaking-back when coming out of the can is avoided.

Figures 5 and 6 show the detaching rolls in plan and elevation. By referring to the plan you will note the manner in which the web is laid upon the apron, so that when the same is condensed into the trumpet to go into the coiler, the even result will be readily seen without further explanation.

8th. Owing to the fact that the nippers are not opened until the oscillating motion away from the circular comb toward the detaching rollers has taken place, it will at once be seen that it is absolutely impossible for any long fiber to be carried around with the circular comb and be taken off in the noil, and one of the very marked characteristics of the working of this machine is the entire absence of long fibers in the noil.

Such in brief is the general description of the Gegauff comber. The advantages claimed for it by its makers and inventor are as follows:

A saving of two-thirds, at least, in floor space per pound of sliver produced.

A saving in labor, as one hand will mind as many of these combers as she will of the Heilman.

Large product per machine; for instance, Egyptian 500 pounds per week and other qualities accordingly.

Ability to comb the shorter staples of cotton with success.

More perfect combing with a minimum of noil.

Less preparatory machinery needed; for instance, one set of preparatory machines are required for eight Heilman combers, producing 2400 pounds per week. One set of the same machines suffices to feed twelve Gegauff combers, producing 6000 pounds per week.

No breaking back of the sliver when leaving the can after combing.

No breakage of the sliver on the sliver plate in dog-day weather (there being no such plate).

Such being the advantages claimed, it remains for practical manufacturers to determine whether or not they are justified. Such radical departures from existing and well established practices are naturally looked upon with some doubt by conservative people, who always demand full practical proof of the facts before a general adoption of the principles involved.

It is not my purpose in presenting this paper to endorse all the claims made for this machine, or to misuse the privileges of the Cotton Manufacturers' Association as a means of advertising. The various styles and makes of machinery must always speak for themselves, and will be adopted or rejected according to their actual merits. There has been, however, such a large number of these combers brought into the country during the past year as to create no little interest in the machine by manufacturers.

A brief outline of the machine I have endeavored to incorporate in this paper, and in conclusion I would most strongly recommend the careful perusal of Professor JOHANNSEN'S detailed treatise on the theory of cotton combing to which I have referred.

FIFTH SESSION.

THURSDAY EVENING, OCTOBER 18, 1900.

The Association met in the banquet hall of the Arlington Hotel at 8 P. M., President THOMPSON in the chair.

The SECRETARY. Mr. President, the first paper this evening is The Development of Textile Patterns in Former Centuries, by Professor PAUL SCHULZE, Director of the Royal Textile Museum of Crefeld, Germany.

THE DEVELOPMENT OF TEXTILE PATTERNS IN FORMER CENTURIES.

PROF. PAUL SCHULZE, Director of the Royal Textile Museum at Crefeld, Germany.

A German proverb says: "Kleider machen Leute," which is equivalent to the English: "Fine feathers make fine birds". Another proverb runs: "We receive a man according to his dress, and dismiss him according to his intellect". Accordingly we find that it is a first principle in human nature to take special care as regards the attiring of the human body. Savages only make a modest attempt by tattooing their bodies, while the civilized nations of all ages and countries have made an art of dressing themselves in splendid and rich costumes. This endeavor gave birth to an industry, which up to our days has contributed in no slight degree to the prosperity of many towns and countries. I mean textile industry.

It is not my purpose to read a lecture upon the history and development of art and industry; my particular object is to give a very general summary of the evolution of textile design from the earliest times, and to show how many interesting details can be supplied by such an apparently insignificant subject as that of woven designs.

With regard to the period at which our investigations should commence, it might be considered that the art of usefully applying such perishable materials as the fragments of flax, the wool of sheep and the fine thread spun by the silkworm, dates from no very distant time; but that is a great mistake. We should be wrong in dating the birth of the textile industry at the com-

mencement of the Christian Era. We should be equally in error if we placed this period 1000 years further back to the time when Greek art was not yet spoken of, much less European culture. We can with confidence go back still 3000 years farther, that is in all 6000 years from the present time. Monuments of this early period prove to us that even then, there was a culture in ancient Egypt which did not exclude the existence of a textile industry; on the contrary, its existence may be proved with almost certainty.

About the year 4000 B. C., King Mena is said to have reigned over Egypt. He was accused by his successor of having enervated his people by excessive luxury. He was cursed by the priests (which also may be taken as a token of civilization) and this curse was engraved upon a square stone. GEORGE EBERS, the German author, informs us how King Teta's mother occupied herself with the study of physic and concocted a lotion to make the hair grow. Now I think I may fairly conclude that a race of people, who were in need of some means to make the hair grow more freely than in the natural condition, would not have neglected the protection and adornment of the other parts of the body; hence, the existence of textile industry may be easily inferred.

In a series of centuries we find that forms of certain animals, plants, etc., which were deemed sacred to religious service, were used symbolically for the designs for clerical vestments and antipendiums. Hence, it is probable that the Egyptians likewise used the forms of their holy animals and plants. I might, therefore, name some of the principal types which form the basis of Egyptian ornament.

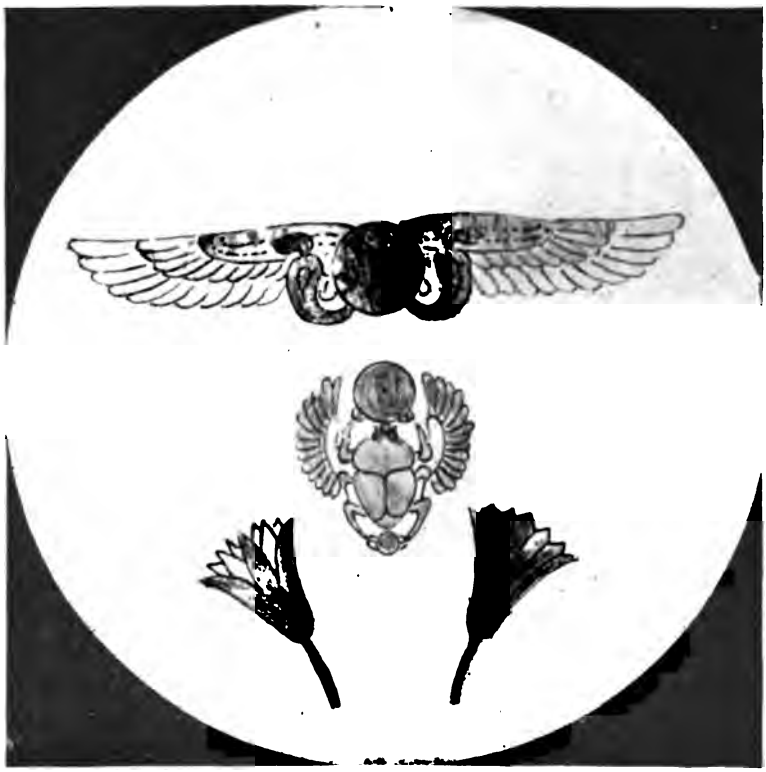

FIGURE 1.

First there are the buds and flowers of the lotus and papyrus plants, which were the symbol of the nourishment of the body and mind. Then the dung beetle or "scarabeus". This insect has the remarkable habit of laying its eggs in excrement, with which it envelopes the egg, forming a little ball. The beetle draws this ball after it with its hind legs until the surface hardens. The ball, containing the embryo of a new life, which the heat of the sun will awaken, was to the Egyptians symbolical of the globe, out of which new life would spring, and resembled on a very much smaller scale the work of the Creator.

The ancient Egyptians being sun worshippers, their most

sacred figure was the disc of the sun, mounting the sky on eagle wings. The Uraus serpent was the symbol of sovereignty in command over life and death. Besides these many animals were sacred.

Another ancient state possessing culture was that of Assyria. The territory between the great rivers Euphrates and Tigris was in early times the home of extensive industrial art. The Bible mentions the magnificence of old Babylon. Its circumference is said to have been about 40 miles.

In the ruins of great Assyrian buildings were found plates made of alabaster which were used for covering the walls. The prowess of the kings was chiselled into these plates. They give us plenty of clues to a textile industry; thus we are able to

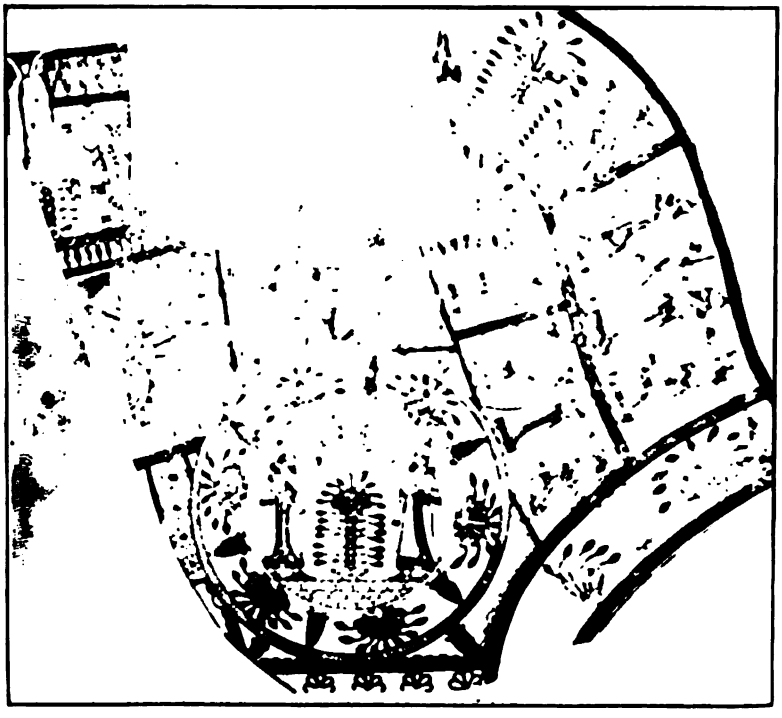

FIGURE 2.

ascertain perfectly well the manner in which the Assyrians made patterns for dresses, carpets and antipendiums.

On these plates [Fig. 2] the Assyrians are represented as being dressed in long loose gowns with fringes, and embroidered to represent beasts fighting, fantastic forms of animals, bodies of lions with human heads and wings, human bodies with wings and birds' heads.

A drawing shows us a piece of the dress of an Assyrian king when sitting upon his throne. In the circles surrounded with palmettos and pomegranates, the tree of life is standing, above which is the disc of the sun with eagle wings. The figures are kings and priests, and those with wings are cherubim with human and eagle heads. The lions with wings probably represent subordinate gods.

A very characteristic ornament was the Holy tree, the tree of life, which bears fruit like pomegranates. The pomegranate plays a large part in the symbolism of many heathen as well as in the Christian religions. In ancient times it was the symbol of love. Jupiter makes the bridal Juno taste of pomegranates. Leah wanted to buy the love of Jacob, who loved Rachel better than her, with love-apples, the smell of which animates love. And lastly the apple was the forbidden fruit of Paradise.

The Bible makes mention of weavings of an Assyrian character. Moses says of the makers of the ten large tapestries of the tabernacle which were ornamented with cherubim, "Them hath God filled with wisdom of heart to work all manner of work, of the engraver and of the cunning workman and of the embroiderer in blue and in purple, in scarlet and in fine linen, and of the weaver." (Exodus xxxv, 35.)

About the official dress made for Aaron, Moses says: "And they did beat the gold into thin plates and cut it into wires to work it in the blue, and in the purple, and in the scarlet, and in the fine linen with cunning work. And they made upon the hems of the robe pomegranates of blue and purple and scarlet and twined linen." (Exodus xxxix, 3, 24.)

A third great state of ancient culture in the far east of Asia

is China. This Empire has an important connection with the textile industry, being the native country of the most precious material for weaving, that is silk. In the year 2698 B. C. the consort of King Hoangti, named Louitsen, is said to have invented the rearing of silkworms and the weaving of their threads. The strict custom of destroying with fire the dresses of the dead accounts for the fact that few or no remnants of old Chinese textile productions are preserved. Notwithstanding this, we are able to draw conclusions from modern drawings as to those of times gone by.

A great characteristic of the Chinese is their adherence to ancient customs, and a supervising power of resistance to foreign influences. With regard to art, the Chinese are neither progressing nor falling back. They employ objects of all possible kinds, such as clouds, the waves of the sea, groups of rocks, shells, vases, etc., and all the flora. The lotus flower of the Egyptians is often used, as is also the peony, as the symbol of the sky and the earth, deriving from the former perfume, and from the latter brilliancy.

FIGURE 3.

We also find a number of fantastically shaped animals, of which the dragon is a frequent figure; a marvellous creature, with the head of a chameleon, the horns of a stag, the claws of an eagle, and the tail of a serpent.

This dragon is the symbol of supreme wisdom. Its empire is all space, above the mountain tops, among the clouds and also in the underground depths, in the air and in the water. The dragon is the martial device of the emperor and of the senior princes, possessing in this case five toes. The dragon of the junior princes, not being so important, has four toes, and that of the mandarins, only three.

FIGURE 4.

The device of the empress is the Phœnix, a bird with a peacock's tail, and a head covered with protuberances. It symbolizes a long and happy life.

FIGURE 5.

The Chinese horse or "Khilin" has the body of a stag, the horns and tail of an ox and horses' hoofs. This marvellous creature appears in Assyrian art as an unicorn, and it may be traced up to the 13th and 14th centuries.

After considering the textile industry of the three oldest civilized nations in Asia and Africa. we turn to Europe and give our attention to the nation which laid the foundation of European culture, that is the Greek nation.

Until 1879 we are only able to draw conclusions as to the designs on Grecian stuffs from the decorations of old buildings and old potsherds. Grecian authors give a good deal of information upon the designs of these stuffs. Excavations made in

South Russia in 1879 have confirmed the supposition that no branch of industry or art has its own decorations, but that the dominant style belongs to them all. Among the articles found in the tombs were a number of fabrics, the dates of which were noted positively by inscriptions.

A little piece of woolen material was found in a tomb dating 5th Century B. C.

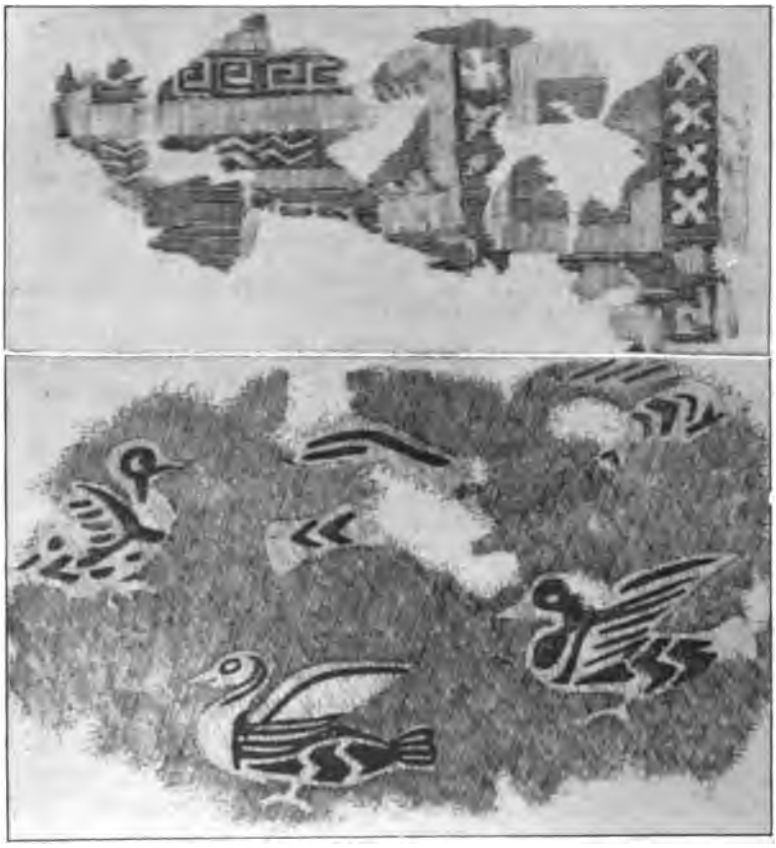

FIGURE 6.

It is decorated with zigzags, little crosses, meandrian lines and similar motives. Another remnant of stuff proves the great

perfection of the Grecian textile industry. The patterns are woven in tapestry style. The design represents ducks with raised wings and heads. Other different fragments were found in the same place.

As these preserved fragments of the Ancient Greek weavers' craft are of the greatest value to enquirers, so numerous literary references convince us of the cleverness of the Greek figure weavers. It is impossible to quote all the relative passages, but it may be sufficient to mention two of them.

Ovid, in his metamorphosis says of Arachne: "It was pleasant to observe Arachne winding the wool and curling and twisting it into fine thread." She contended with Pallas Athene in a trial of their skill in weaving. Pallas wove the castle of the Cecrops, standing on the rock of Mars, and of the quarrel concerning the name of the country. Twelve immortals are seated on their thrones in austere solemnity with Jupiter in their midst. Neptune, the sea god, alone, is standing, and with his trident he strikes the unhewn rock from which the salt water gushes forth. Pallas Athene is shown, furnished with the defending Ægis and having on her head a helmet, and in her hand a pointed lance. At the place where the lance has pierced the ground, a green olive tree bearing berries is sprouting. The work is surrounded by a garland. The gods look at it with astonishment.

It is very interesting to compare this woven picture described by Ovid with the splendid sculptured work executed by the celebrated Greek sculptor Phidias for the frontispiece of the Parthenon, the temple of the goddess Athene, on the Acropolis.

FIGURE 7.

The British nation is fortunate enough to possess in the far-

famed Elgin marbles in the British Museum the original remnants of this work of Phidias. A completed drawing of them also shows the representation of the quarrel, concerning the name of the town of Athens.

But now the description of the picture woven by Arachne in this trial. She wove the story of Europa carried away by the bull. The latter seemed to be really living and the sea to be heaving. In addition Arachne wove Asteria seized by the flying eagle, the loves of Leda and the Swan, and other similar scenes.

Ovid reports, moreover, that Pallas Athene was not pleased with Arachne's work, on the contrary she punished her by changing her into a spider, ugly indeed, but a skillful weaver. This was Arachne's punishment for having had the temerity to remind the daughter of the father's amorous adventures.

The following quotation taken from the Odyssei also gives a clear image of Grecian designs. Ulysses describes to Penelope the dress he wore on his departure to Troy: "The dress of the noble Ulysses was of a purple color and rough in texture, with flashing embroidered front. A spotted doe is struggling under the forelegs of a savage looking dog. The astonishment of all the beholders was excited by the manner in which the dog, embroidered in gold, was strangling the doe, while glaring at it most ferociously, the latter meanwhile endeavoring to regain its freedom."

FIGURE 8.

This embroidery is very interesting because we find among the stuffs of the 13th century a design very similar to this.

What weavings of Roman origin have been preserved, date from the time of the Roman Emperors.

FIGURE 9.

A very rare little piece of silk, perhaps belonging to the time before Christ, is preserved in the church of Valeria in Sitten, Switzerland. The design shows a female figure sitting on the back of a sea dog, and under the latter an akanthus stalk. This piece of silk from Sitten, the Grecian fragments, already mentioned as being found in Southern Russia and perhaps two or three other little remnants in various museums, are probably the only known remains of figured textile products of the time before Christ.

To arrive at the place where probably the oldest weavings of the Christian Era were produced, we must again return to the country which has shown itself so well able to preserve the treasures entrusted to it, I mean Egypt. In Sakkarah and Alkmun in upper Egypt, large cemeteries have been discovered

in recent years. The dead bodies, contained in them, were not enveloped in strips of linen, as were the Egyptian mummies, but were dressed in the garments they had worn when alive. We obtain a complete figure of the costume of this period. But we are more interested in learning the materials of which the garments are made. There is a coarse thick woolen material, which was used not only for winter clothing, but also, when steeped in water, for cooling the wine vessels in summer. But our greatest interest will be excited by the woven strips used for the decoration of garments, and by the round and square pieces of cloth which were signs of rank.

FIGURE 10.

These articles were woven in tapestry style with many colored threads in wool. This medallion represents perhaps the history of Joseph in Egypt. Another one

FIGURE 11.

shows Abraham intending to sacrifice his son Isaac.

Not only were woolen fabrics found in excavating these tombs, but also silk materials.

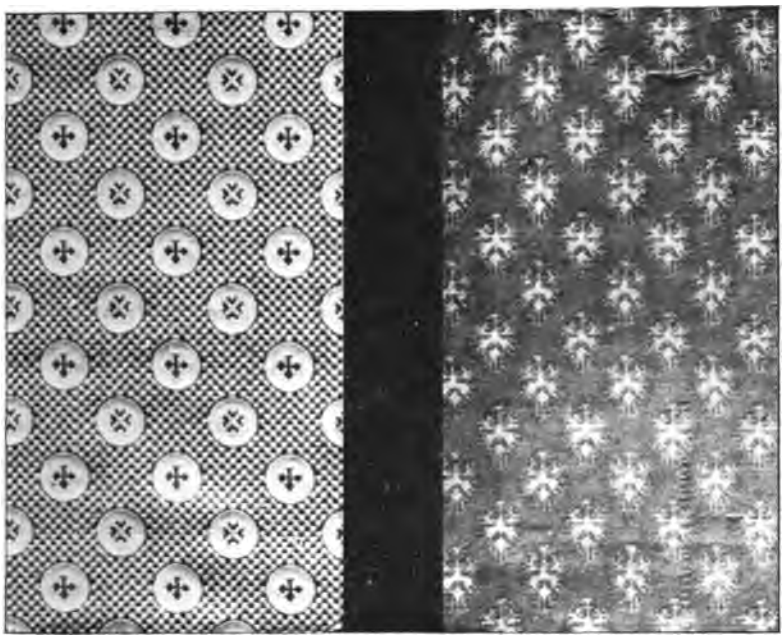

FIGURE 12.

We find small designs not larger than the size of a pea, composed of little diamonds, hearts, spades and clubs.

FIGURE 13.

Also large ornamental circles with horsemen or dancing girls in their centres.

At present it is hardly possible to say positively whether these fabrics were manufactured in Persia, or whether they were woven in Alexandria, Antioch or Byzantium. Similarly, we are not able at present to determine the age of these fabrics. At all events, we have reason for supposing them to be some of the oldest preserved woven products of the Christian Era, belonging to the time between the 3rd and the 8th centuries.

Now let us consider the Persian woven designs. At the time when the Romans were losing more and more of their indepen-

FIGURE 13.

dence, owing to the enervating results of their social life and the lassitude of their rulers, and when from these causes the Roman Government was hastening to its ruin, the Persian Empire in Asia was building up a new civilization upon the ruins of a culture, then long gone by. In the year 226 B. C. Axtaxerxes I, took in hand the government of all Central Asia; he founded the family of the Sassanides who reigned in Persia 426 years. The greatest prince of Persia was Khosrev Anushrev (531-579). During his reign commerce, industry and weaving of a high character flourished. Some original fabrics kept till the present day as coverings for relics, prove the great perfection of this Persian textile industry.

Now let us analyze the *designs* upon the so-called Sassanide

weavings. We mostly find large circles standing in rows one upon the other. The points of contact are covered with roses, smaller circles and polygons. This is a very characteristic design, and one which occurs in Persian and Byzantine fabrics of the 4th up to the 12th and 13th centuries.

In the church of St. Servatius in Maestricht, there is exhibited a small collection of fabrics of the middle ages.

FIGURE 14.

Amongst them is a very brilliant specimen of Persian weaving skill. A broad circle, decorated florally, incloses two Persian kings on horseback hunting lions. Hunting scenes very often appear on Eastern fabrics, because the Orientals are great sportsmen,

and we shall see similar scenes until the end of the middle ages. Very interesting samples of Sassanide fabrics are preserved in the treasuries of the churches on the banks of the Rhine and in Aix-la-Chapelle, in several museums, such as the South Kensington Museum in London, and particularly in the Museum of Industrial Art in Berlin.

We now turn from the Persian land of wonders to European ground and consider the silk weaving of Byzantium. This new capital, which since the time of Constantine the Great, took the place of ancient Rome, endeavored to emulate the old city in all matters appertaining to art. In the beginning of its development, Byzantine or early Christian art was a hybrid offspring of the influences of the Western nation, which ruled over Byzantium, and of the Asiatic races subjugated by the Romans.

With the government of the Emperor Justinian (527-560) a new epoch was inaugurated, and an independent creation of a new style. The government of the Emperor Justinian was the prominent feature of the Byzantine Empire, as well in art as in history. Justinian, not without reason, has been compared with Louis XIV. Both showed the same activity and capability, both were animated by the same bigotry, both were under the influence of petticoat government, and in the states of both sovereigns, ambition for military glory and a great love of pomp nourished by taxes, produced the same results.

Justinian employed all the financial schemes of modern politics to swell the public revenues, such as every description of tolls, duties on eatables, state monopolies, etc., of the latter, the monopoly of manufacturing splendid silk goods, is particularly remarkable. The rearing of the silkworm in Europe cannot be traced back earlier than the reign of Justinian. Before this time the silk was imported from India and China, in which countries its production was guarded as a great secret, and the export of the eggs of the moth was attended with severe penalties.

The legend runs, that two monks conveyed in their hollowed pilgrim staves some eggs of the silk moth and seed of the mulberry tree, so important for its nourishment, when returning from a pilgrimage from the distant China in 555.

FIGURE 14A.

The illustration shows one of the six large wall paintings of the Royal Textile Museum at Crefeld. Justinian and his spouse, Theodora, on the throne. Monks pour out of their hollowed pilgrim staves the eggs of the silk moth.

These were the germs from which an industry was to be evolved, to which Europe owes a large part of its present opulence.

Justinian was able to appreciate the great importance of silk weaving and silk industry. He brought into his own manufactories silk weavers from those countries which were distinguished by their textile skill, or which were in competition with him. We know that the Persian kings of the family of the Sassanides established silk manufactories in the same manner as Justinian.

They paid great attention to the silk trade, rightly valuing their favorable geographical situation, which placed them midway between the Orient and the Occident. For this reason, Justinian engaged first-rate Persian weavers for his imperial factories.

It followed as a matter of course that these weavers did not immediately resign their own tastes, and thus we find, especially in the earlier part of this period, great similarity between the Byzantine and Persian drawings.

In the treasury of the church at Maestricht there is kept a piece of stuff which belonged to the garment of St. SERVATIUS, the patron of this church in which he was buried.

FIGURE 15.

The figured part of this design is also surrounded by connected circles having a diameter of a quarter of a yard. Within the circle two brothers stand upon a doric column, perhaps Romulus and Remus, or the two Dioscurii, Castor and Pollux. On each side of the column a bull is being sacrificed. Two angels pour out the libation.

Another celebrated fabric is preserved amongst the treasures of the Aix-la-Chapelle Cathedral.

FIGURE 16.

Here also we see large connected circles with diameters of over half a yard. The figured center, a team of four horses, is sure to relate to the chariot races, which were so popular at the

time of Justinian, that the two great political parties of Byzantium used to wear the colors of the charioteers. Hence the name of the parties "blue and green."

A scene very often represented in designs of the 7th and 8th centuries is that of a man fighting with a lion.

FIGURE 17.

It may be the fight of Hercules with the Nemean lion, or Samson strangling the lion, or finally the struggle of Christian martyrs with wild beasts in the Roman Amphitheatre.

It is not possible here to describe all the woven pieces made under the influence of Byzantine art up to the 13th century. It

may be stated that most of the designs were composed of animals facing one another, and often surrounded by graceful ornament. All possible varieties of animals were made use of. In old inventories of churches we find mentioned the chasuble with lions, the eagle dress, the chasuble with elephants.

An interesting brocade with lions and reptiles is preserved in the South Kensington Museum in London.

FIGURE 18.

The late Dr. F. BOCK of Aix-la-Chapelle, one of the best known connoisseurs of ancient textiles, says in his book: "Die liturgischen Gewaender des Mittelalters," with reference to this

design: If in Christian art the royal lion of the tribe of Juda represents our Saviour, which is undoubted, then in this design our Saviour would be Lord and Commander of the whole creation, and it would be possible to find a reference in this design to the Psalm: "Thou wilt stalk across serpents and salamanders."

A cope with large eagles is preserved in Brixen Cathedral in the Tyrol (Switzerland).

FIGURE 19.

On a red satin ground we see large eagles in a dark greenish black color. The actual size of the eagles in the pattern taken from one wing to the other is 20 inches.

A most interesting pattern is to be seen on the splendid silk stuff in which the bones of Charlemagne were enveloped in the Aix-la-Chapelle Cathedral.

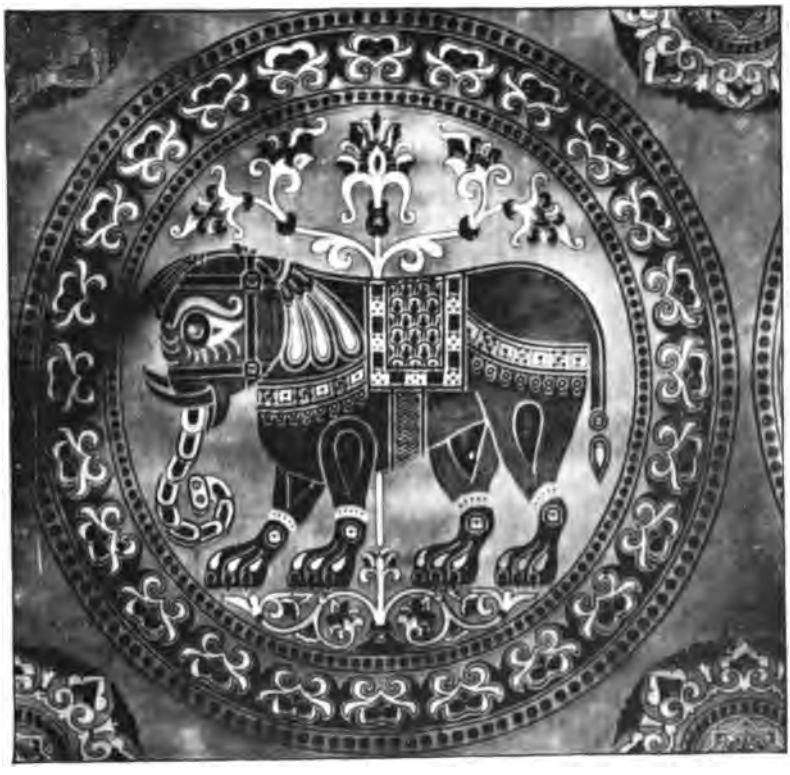

FIGURE 20.

The ground color is red, the elephants and ornaments, white, yellow, green and blue. The diameter of the circle is 32 inches.

Another interesting silk pattern preserved in the Royal Textile Museum at Crefeld shows large lions.

FIGURE 20A.

The Greek inscription between the two lions says: "In the reign of Basileios and Constantinos, our Christian Governors." These Greek Emperors ruled in Byzantium from 976-1025-1028.

Besides these fabrics bearing the large designs, several remnants of materials are preserved which show smaller patterns of geometrical construction. There are pieces of small octagons, roses and little crosses and such like. The quarrels of the image worshippers and image breakers in the 8th century, perhaps had their influence upon figured textile designs; even art was outlawed, being considered an accomplice of idolatry. But this is a matter I leave to others.

Remains have been preserved of another class of silk goods which have their interest from a technical point of view.

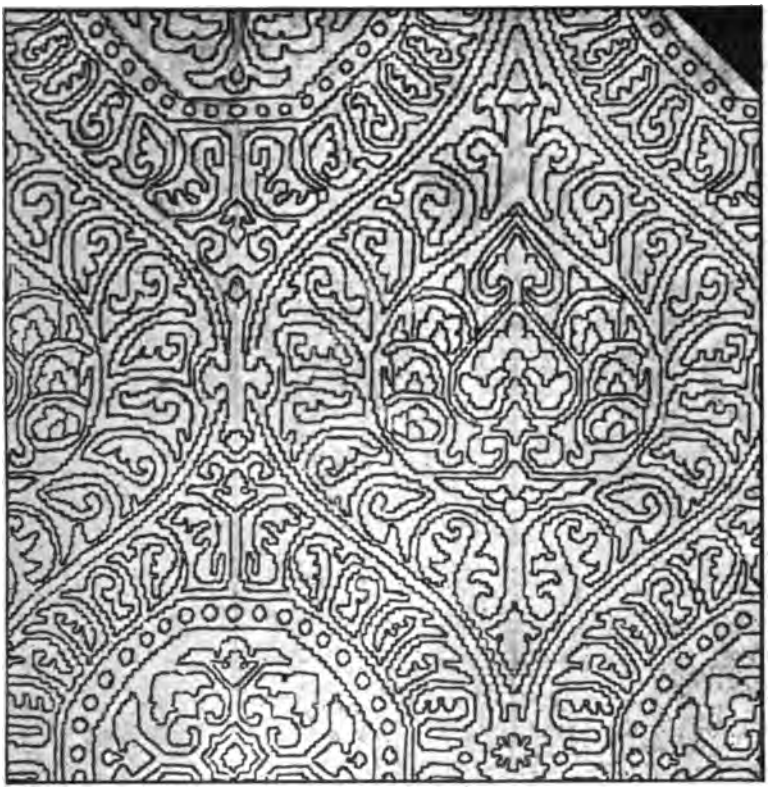

FIGURE 21.

Owing to the method employed in binding the warp and the weft, the finely drawn designs, composed only of outlines, merely appear as though engraved upon the shiny satin surface. It is very probable that these fabrics are also examples of Byzantine textile art. The period at which they were produced is determined by the places where they were discovered, and by the traditions attached to them. In the cathedral of Xanten near the lower Rhine, a yellow chasuble of St. Bernard is shown. In the Royal Textile Museum at Crefeld is exhibited a piece of the garment in which Emperor Otho the Great (936-973) was buried.

The consideration of textile design subsequent to the decay of Byzantine art brings us to the art of the Mohamedans. With the spread of Islamism, a great revolution of culture took place. Owing to the rapid propagation of Mahomet's doctrines, his adherents, within 100 years after his death, that means to say in the 8th century, had obtained a footing eastwardly as far as the banks of Ganges, and westwardly over all the northern part of Africa, as well as in Sicily and in sunny Spain. The Arabians transported into their newly conquered dominions, not only their creed, but also their culture and science. In Spain splendid palaces arose, all the pomp and luxury of the Orient expanded, and industry and commerce reached a height never before attained.

In the same manner as in Spain, the Arabs exercised their industrial and artistic skill in the sea girt Etnean Island of Sicily. This grand era of textile industry did not commence until after the conquest of Sicily by the Normans. It bears the name at the present day of the Saracenic-Sicilian epoch of textile art, and a large number of splendid examples of this period are preserved in our churches and museums.

The Normans, in quest of booty and territory took possession of Sicily in the 11th century. After settling there, their kings conceived the idea of augmenting their power by developing the resources of the country. This idea was fully carried out by the best of the Norman Regents, Roger II. He knew how to encourage the rearing of silkworms and the manufacture of silk, which was carried on in Sicily by Saracenic weavers. Of great importance to the development of silk manufacture in this country was King Roger's campaign to Albania, the present Greece.

FIGURE 21A.

His return from this campaign is represented in the second wall painting in the Royal Textile Museum at Crefeld. In the midst King Roger II and his spouse, at the right the magistrate of Palermo, at the left Norman warriors bringing from the ships splendid silk goods with Byzantine patterns. King Roger led away captives all the men and women proficient in the arts of weaving and spinning from Athens, Thebes and Corinth. He built dwellings for these men and compelled them to weave for him and improve the silk industry (c. 1114). In order to insure the prosperity of the latter, it was declared to be a royal monopoly. Mulberry trees were cultivated in all parts of Sicily, silkworms were imported and reared with great perseverance to obtain raw silk. An interesting royal silk factory was established at Palermo. This factory, the so-called

Hotel de Tiraz was in the Royal Palace and owed its foundation to the Kelby Amurs, who ruled Sicily as vassals of the Fatimis in the 9th and 10th centuries.

A writer of the 12th century, Hugo Falcandus draws the following picture of it in his description of Palermo. "It is impossible to pass over with silence the celebrated workshop adjoining the palace in which silk is spun into different colored threads, and these threads combined to form fabrics of several varieties. Fabrics are ornamented with a circular design, requiring for this reason great skill and a high price. There are also numerous ornamental patterns of various kinds and colors woven in gold and silk threads. In this class of goods the beautiful effect of the design is often illuminated by the brilliant flashing of precious stones." Under King Roger's supervision the Hotel de Tiraz maintained its special character and excellence of work. A silk manufactory soon sprang up from the Hotel de Tiraz which not only answered King Roger's expectations with respect to the increased prosperity of his country, but also had its influence upon the whole of Italy, as the industry got a footing there also, and laid the foundation of the opulence and power which was to accrue to the towns of Central and Northern Italy.

Let us now examine the designs upon these fabrics made at Palermo by the Saracenic and Greek weavers.

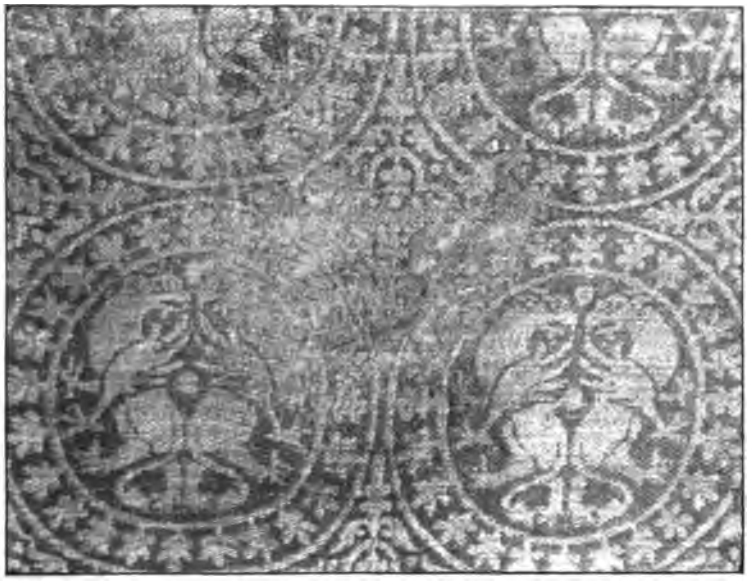

FIGURE 22.

We find that they used the same patterns as in their native countries, symbolical animals enclosed in large or small circles in contact with one another or by polygons, just as in the Byzantine work.

In the Royal Textile Museum at Crefeld, there is preserved a little fragment of the stola in which the remains of King Roger II were enveloped in his tomb at Cephalo near Palermo.

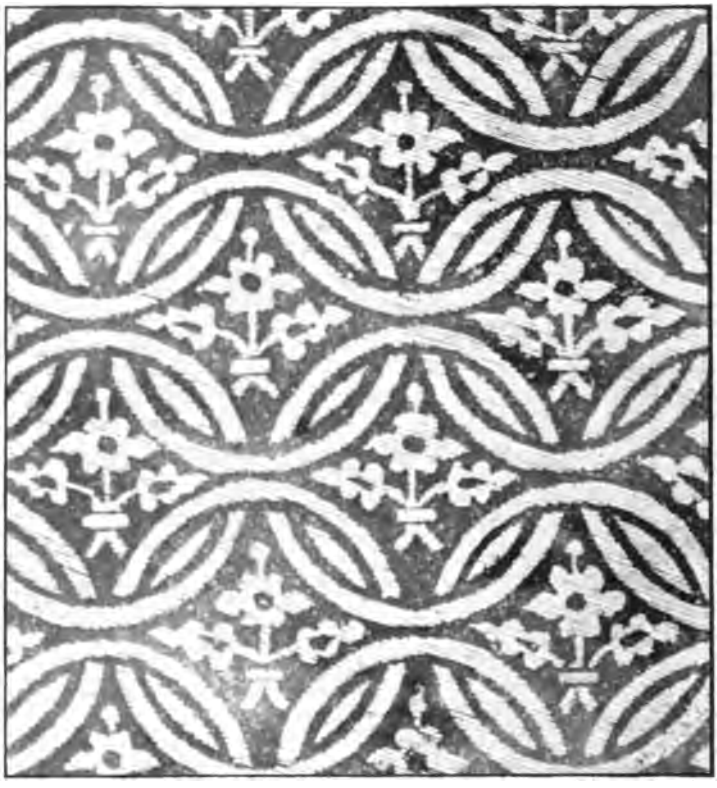

FIGURE 23.

Other samples of this period bearing more distinctly the character of Saracenic fabrics, are the following.

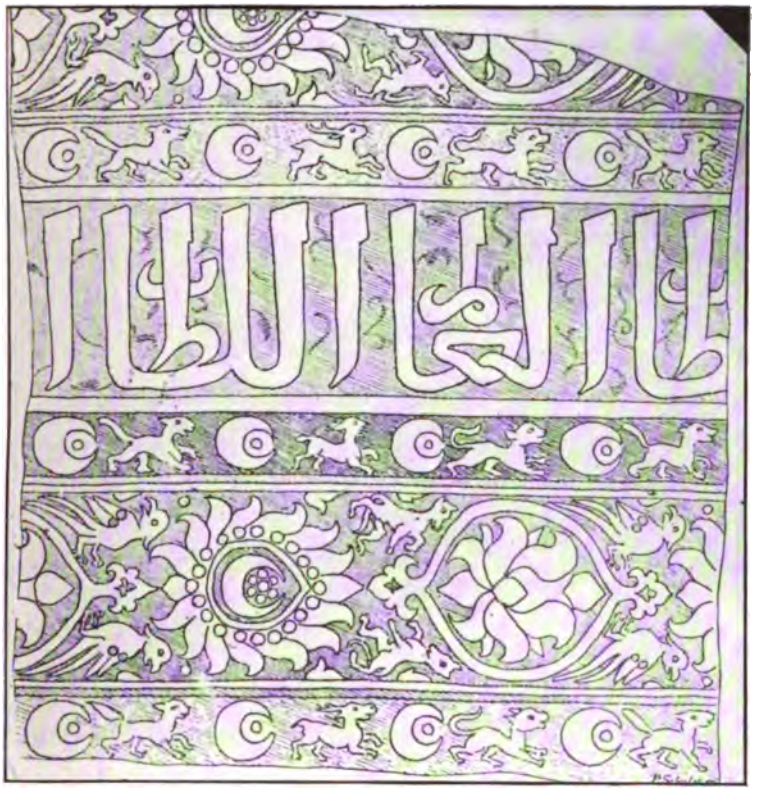

FIGURE 24.

The designs upon them are composed of stripes of different colors, red, green, blue and white with ornaments of gold threads. In the stripes we often see Arabian inscriptions. A rare fabric, which came from the church of St. Mary at Danzig, shows an Arabian inscription "assultan alalim" which means "The wise Sultan."

At Ratisbon are two chasubles which the German Emperor Henry VI presented to the Ratisbon Cathedral. He inherited Sicily by his wife Constance, the heiress of the Norman crown. With this Emperor the vestments of the Norman kings, manufactured in the Hotel de Tiraz and bearing Latin and Arabian

inscriptions passed into the possession of the German Imperial family, and until 1794 were the official robes of the Emperors of the Holy Roman Empire of the German nation. The designs upon the two chasubles at Ratisbon are also striped in the same way as those already described.

The Arabian inscriptions on these fabrics are very important. One of them means "Glory, victory and long life." The other proves without doubt the origin and age of these materials. It runs: "This holiday garment was made by Master Abdul Aziz in his factory for William II." This was a Norman king reigning from 1166-1189.

Apart from royal robes, the most handsome materials were used to make dresses of honor, which Mahommedan princes were pleased to bestow on those who had succeeded in winning their royal approbation. A welcome ambassador, the bringer of good news, a Court favorite, a servant who had done something (or nothing) that pleased his master, would be rewarded, the robe being appropriate to the rank of the person to be thus distinguished. To give the wrong dress would be like bestowing the order of St. Michael and St. George on an Indian officer or the C. I. E. (Commander of Indian Empire) on an Australian.

The ornamental use of letters is a characteristic of Islam art. Mahomet in his intense eagerness to suppress the worship and making of idols has repeatedly pronounced in the Koran a strict prohibition against making any representations of created beings. He considered such acts to be an encroachment upon God's omnipotence. According to the words of the prophet the creations of unbelievers in this world will mount upon their backs in the day of judgment with horrible forms and distorted faces, and the unbelievers will be forced to bear this horrible burden forever.

To compensate for the loss of figured patterns, the skilful Mussulman took a very sensible course in conveying with the assistance of his letters, so well capable of this treatment, the ideas expressed in other styles by allegories and symbols. Thus we find the walls of the mosques and palaces richly decorated

with sentences from the Koran and holy books; their woven goods also show the employment of letters in their designs. However, the subtle expounders of the Koran soon found a means of evading the strict letter of the law, and admitted a more lenient interpretation of it. After this only naturalistic imitation of living creatures were considered unlawful, whilst a conventional treatment which nearly represented the genus of the creature, as well as fantastic forms, which owed their origin to the inventive minds of the Orientals, were permitted. The employment of Christians to weave such unorthodox designs as beasts and even human beings, however, was in itself a salve to the Muslim conscience; for the Christian weaver, and not the Mahometan weaver might be expected to receive the punishment. Similarly the prohibition against the wearing of silk dresses (which Mahomet considered should only be worn in Heaven) was held not to extend to the use of silk fabrics with a linen warp, and the prohibition against the drinking of wine is today not referred to the drinking of champagne, because Mahomet who did not yet know this noble drink, was unable to forbid it.

In the textile fabrics made by the Moors in Spain, we can see abundant evidence of their strict avoidance of figure subjects.

FIGURE 25.

The Arabs, with their peculiar capacity for mathematics, preferred geometrical designs and such composed only by ornaments. We learn from various writers how important Moorish manufacture in Spain was from the 10th to the 15th century. The towns of Almeria, Granada, Cordova and Seville were particularly famous for their productions. In Seville 60,000 looms were said to have been active, whilst in another district nearly 3,000 localities were engaged in the art of weaving.

The combined work of the Greek weavers, transported to Palermo by Roger, and of the Saracens introduces a new style of textile designs, which by the skillful combination of graceful line and floral ornament with figure drawing, appreciated from the

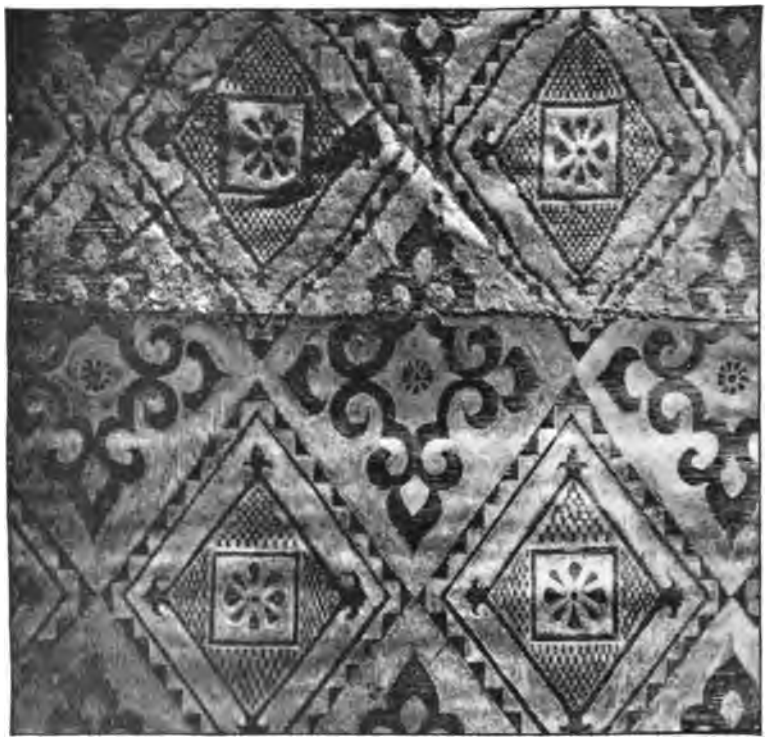

FIGURE 25.

earliest times by Oriental taste, form the most interesting and attractive textile products of all ages.

Elegantly drawn tendrils form the ground work over which move slender and lithe limbed animals. A loving adherence to nature gives great vivacity to all the figures. Human figures are plentifully interspersed; men, and more often maidens, hunting animals are enclosed in characteristic surroundings, such as castles, shells and nets, like the bewitched princess in the contemporary fairy tales of the Arabian Nights.

FIGURE 26.

It is interesting to learn that these designs often have a symbolical meaning. For instance a lion seizing a duck pursued by an eagle, means that the possessor of this garment was valiant enough to snatch the booty from the claws of the eagle; the eagle signifying luck and riches, the lion power and government.

FIGURE 27.

From a pattern upon a piece of silk of the 13th century, showing a lion and a hoopoe, it may be inferred that the fabric belonged to the robe of a strong and wise sovereign, since the hoopoe signifies wisdom. Moreover the little inscription in the narrow border of the stuff says: "The Wise Sultan".

FIGURE 28.

Another design shows a woman catching a hare with a net and holding by a chain or cord a hound and spotted cheetah. Beneath this we see a woman with an eagle. From Arabian symbolism we learn that the catching of the hare signifies opulence and marriage. To dream of riding on an eagle's back foretells riches, and if a person should see a woman carried on an eagle's back, he will eventually arrive at government.

Another design of that period, often used nowadays in modern fabrics for chasubles, etc., in Catholic churches is the following:

FIGURE 29.

Two stags fastened with chains and turning their heads to Heaven, kneel on a flowery ground, surrounded by large connected hexagons. Dewdrops and sunbeams fall from the disc of the sun which is partially hidden by clouds where two eagles are sitting. In this pattern the stag is supposed to be the symbol of the human soul weary of life and yearning for the delivery from its mortal body, therefore looking Heavenwards. We shall not be mistaken if we find in this interesting design a reference to the beautiful words of the 42nd Psalm: "As the hart panteth after the water brooks, so panteth my soul after Thee, O God!"

We are thus able to discover a great number of interesting scenes.

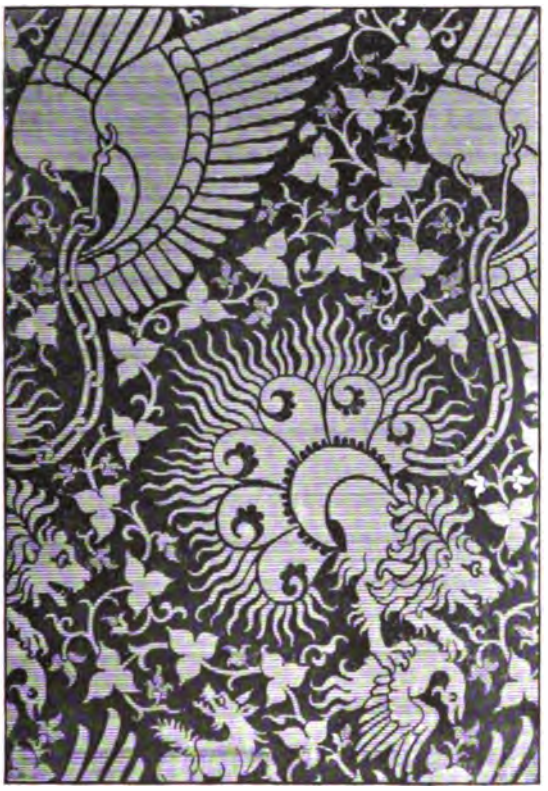

FIGURE 30.

In another a lion steps from the winged disc of the sun holding in its claws a little animal. Another design

FIGURE 31.

shows a fountain, the structure being decorated with dragon heads from which hang scoops. Two girls carrying hares stand at the side of the fountain. Hounds and cheetahs lap the water flowing from the basin.

FIGURE 32.

Lastly may be mentioned an interesting design woven in gold threads in which we see alternate repetitions of stars and a twisted ribbon bearing an Arabian inscription above which a pigeon is flying underneath a large crown.

But let us pursue the advancement of weaving in Europe. Whilst at the Hotel de Tiraz at Palermo, those splendid silk fabrics with gold thread designs, those magnificent velvets and embroideries, bearing precious stones in gold settings, were being manufactured, we see at the end of the 13th century the towns of Italy enter into competition with Palermo, and thus, especially as regards those towns in the north of Italy rise to great power and affluence.

Let us give our attention to the political situation at that time. I have already shown how the advancement made in textile production by some countries was due to political causes, and how artistic taste was affected by the same events.

The first town of the Italian continent to produce textiles of any importance was Lucca. It is mentioned in this connection in a manuscript as early as 1248. Manufacturing was carried on there to an important extent; they despatched their products to Paris, Bruges and London. But commerce and industry were soon interrupted by civil wars of a sanguinary character. Owing to this cause many clever workmen quitted Lucca and settled in the neighboring towns; Milan, Florence, Bologna, Venice and Genoa offered refuge to these fugitives, and laid claim to their skill.

The many difficulties which had to be overcome in the introduction of such a complicated industry, such as obtaining of the raw material and the technicalities of weaving and dyeing, gave no opportunity at the commencement of this industry for the creation of new patterns.

The Italian towns will have obtained most of their workmen from the Sicilian factories, who brought with them their own taste to these towns. Hence we again find in the fabrics of the Italian factories of the 14th century, at first the same patterns as those made by Saracenic looms in Sicily, or by those of the Moors in Spain in the early times.

Therefore, it is difficult to say for certain, to which place of manufacture the patterns of this period belong, and it is not until the middle of the 14th century that the differences in style appear more obvious owing to the advent of the new Italian ornament. It is true that the Italians used the Saracenic designs, but they paid no attention to their symbolical meanings; they thought it sufficient by copying animal figures and borders, bearing inscriptions and floral ornaments to imitate similar designs upon the Saracenic weavings, which were valued so highly at that time.

FIGURE 33.

They would take a group of animals at random, surround it with secondary ornamental work, and add to this examples of their own style of ornament. Thus we see animals and plants mingled together with fantastic forms, cartouches, escutcheons, crowns, castles, fences, fluttering ribbons and so forth.

In some cases the designs upon the Italian fabrics of the 14th century also admit of a symbolical interpretation. This is proved by an interesting design preserved in the Royal Textile Museum at Crefeld.

FIGURE 34.

The interpretation of this is as follows: The dog, the symbol of the human soul, has been freed from this mortal life, as indicated by the broken chain; the eagle the symbol of divinity, having descended from heaven to break the chain, now steers the soul to the abode of the blessed, and this action takes place under the shade of the great and mighty tree of the church. This design was probably made for use at funerals.

That these brilliant fabrics with their splendid and interesting designs influenced the poetical art of that time and the songs of the German minstrels, is proved by the fact that in the Nibelungs the seventh part is occupied by the description of splendid garments.

FIGURE 35.

But, on the other hand, songs and legends have also been the cause for making interesting designs. One pattern shows a maiden standing on the battlement of a castle and holding a falcon endeavoring to fly. In another pattern we see a maiden coming out of a large flower, on her hand a falcon with bells on its feet, and by her side a dog fastened with a cord.

FIGURE 36.

The following song may be referred to these patterns.

Ich Arme einen Sperber lieb zu haben!
So liebt ich ihn, dass Sehnsucht mich verzehrt,
An meinem Ruf schien sich sein Herz zu laben,

Poor me to have had a falcon for a pet
I loved him so tenderly that I am ill of love-longing
He seemed to like so much to hear my calling,

Oft hat er Kost aus meiner Hand begehrt.
Nun stieg er auf so stolz und so erhaben,
Viel stolzer als er sich mir je bewährt.
In einen Garten flog er ueber'n Graben
Und eine andr'e Herrin hält ihn werth.
Wie reicht ich dir mein Sperber Leckerbissen!
Goldene Schellen gab ich dir zu tragen,
Dich freudiger zur Vogeljagd zu wissen,
Nun flogst du hin und lässest mich verzagen.
Du hast die Bande freventlich zerissen
Just da du meisterhaft verstandst zu jagen.

He used to take food from my hand.
Now he soared aloft proud and noble,
Much prouder than he ever did for me.
He flew over a foss into another garden,
And another girl loves him.
How many dainty bits I offered you Falcon!
I gave you golden bells to wear,
To make you more joyful for the hunting of birds,
But now you leave me and my heart faints.
You wickedly broke your bonds
Just when you had learned to hunt masterly.

FIGURE 36.

In the further development of textile designs, the slender and graceful tendrils were converted into knotty branches forming a pointed oval, in the middle of which was placed a group of animals in the Saracenic style.

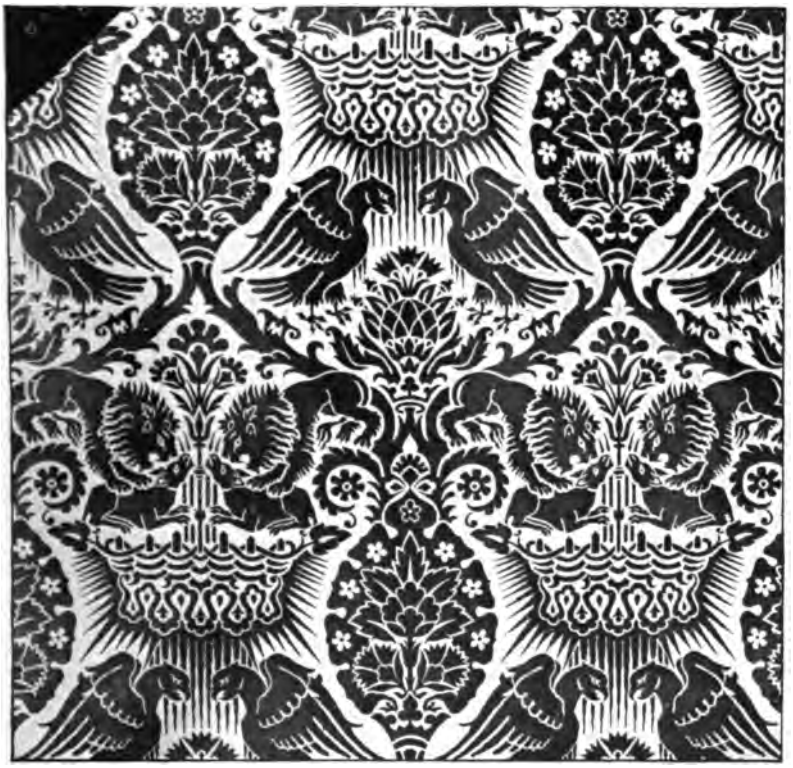

FIGURE 37.

The characteristic ornament of the 15th century, the pomegranate, is made to sprout from one of the angles formed by the contact of the branches. At first the pomegranate is small and takes a subordinated position, the animal figures being predominant, but later on, the size of the pomegranate is increased and that of the animals diminished more and more.

FIGURE 38.

At the end of the 14th century animal figures disappeared totally from design, and the pomegranate was transformed into the imposing pattern, which during the end of the 14th, the whole of the 15th, and the first quarter of the 16th century, was a prominent feature.

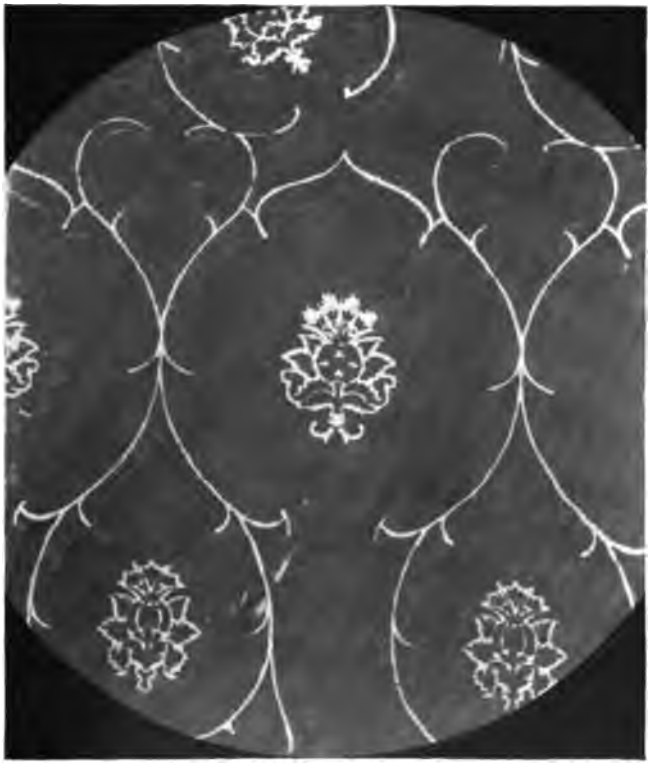

FIGURE 39.

It is composed of fruit like ananas or pineapple, placed in a cluster of leaves, from which flowers and leaves are sprouting, the whole being surrounded by ornaments of different kinds. The arrangement is the same in all patterns.

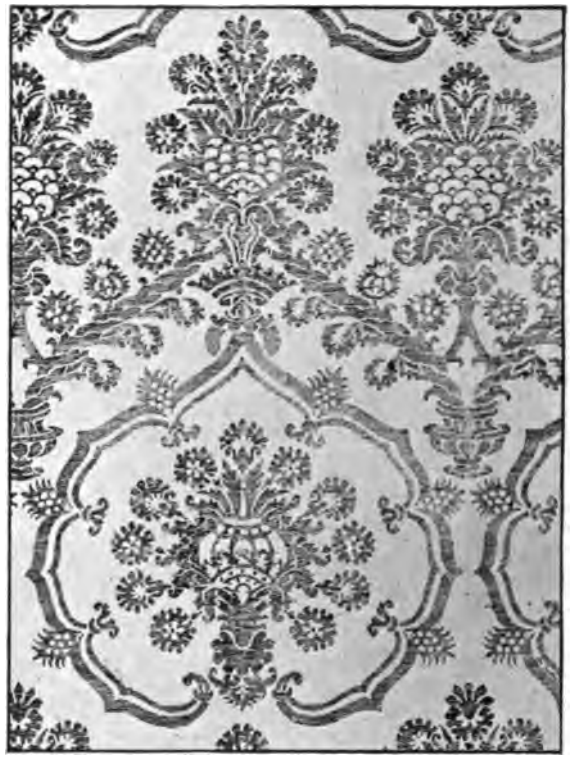

FIGURE 40.

The pomegranate is placed in the center as a symbol of Christian love, and is surrounded by blossoms and fruit, the whole being symbolically interpreted to mean that love, by the aid of faith, brings forth the fruit of everlasting life. The rose with five, six or nine leaves, which surrounds the pineapple, is surmounted by crowns; the reward which charity received in Paradise. The thorny branches, plaited together, tell us of the crown of thorns, and remind us that only by pain and struggle is the victory gained, which brings the crown of eternal life.

A very interesting development of the pomegranate pattern appears about the end of the 15th century.

FIGURE 41.

Broad ornamented stems take an undulating upward course, and on either side branches bearing blossoms, leaves and little pomegranates, are dispersed. They were the fashion of the Burgundian Court in the latter part of the 15th century, where the use of an immense mass of material made the employment of these gigantic patterns possible.

In the paintings of this time we see ladies dressed in robes of many folds and with a long train, which was looped up and carried on the arm. The noblemen of the court of Charles the Bold, were dressed in large gowns, which, on account of their extravagant length, fell to the ground in folds. Even the Saints, the figures of Biblical History, were represented by the artists

of those times as being dressed in the rich velvets and brocades of Burgundian period.

FIGURE 42.

On the large altar picture in the Cathedral of Cologne, the holy men are marching in the midst of their splendid suite as though they were Dukes of Burgundy.

Although these splendid fabrics were produced in Italy and in the Orient up to the 14th century, we find that in the 14th and 15th centuries, owing to the emigration of Italian weavers to France, Flanders and Switzerland, the lucrative art of weaving began to obtain a gradually firmer footing in these countries also.

In France more especially, the kings attempted to attract the

weaving artists by means of charters and privileges, and to settle them in the towns of that country. Amongst these towns Lyons took the first place and rapidly increased, and with its magnificent productions, soon became a dangerous competitor with the other manufacturing towns; this was in consequence of the extraordinary favor and protection which these towns enjoyed from the government.

FIGURE 42A.

The third wall painting at Crefeld shows the French King Francis I and his spouse Eleonore visiting the royal silk manufactories in Lyons in 1556.

We are told that in the middle of the 16th century Lyons gave employment to 17,000 weavers; about the year 1675, from 25,000 to 30,000, and when at its best, in the latter half of the 18th century, to 80,000 persons.

Now let us consider what kind of designs appear on the manufactures of Lyons, Flanders and Italy in the 16th century. It has already been shown by examples how the change from one style to the other occurred. For instance, the change from the animal patterns to the pomegranate patterns. In the same way we may follow the gradual variations of the latter until at last a new motive displaces this pattern, which after having fulfilled its task as a link of this connected chain of textile designs, itself gives place to the new order of things.

FIGURE 43.

Just as we occasionally find in some of the fully developed pomegranate patterns small animals, relics of the textile design of the 14th century, so we find the new characteristic feature of the 16th century pattern to be the vase, in the pomegranate patterns of the 15th century, as you have seen before.

This ornament makes its first appearance in a very modest way, but gradually increasing in size, it finally displaces the pomegranate itself, and maintains its ground for some length of time amid surroundings of the most varied nature.

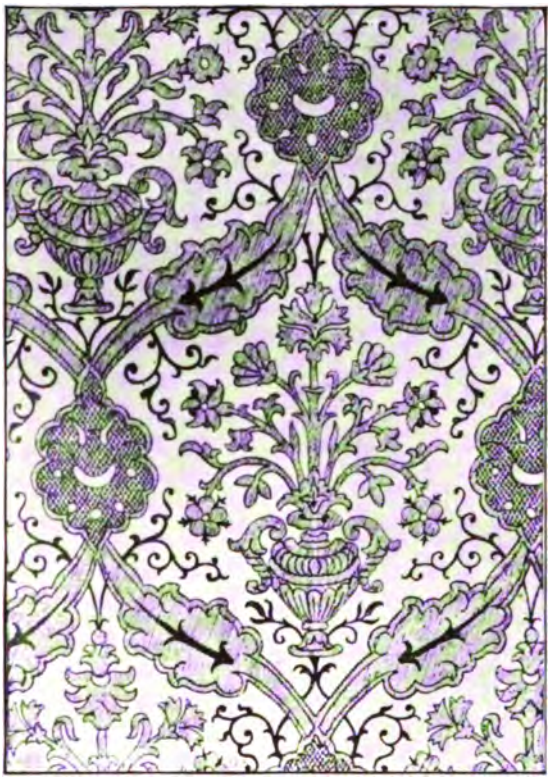

FIGURE 44.

The thorny branches and the rose change into the sharp pointed oval enclosures of branches or of elegantly drawn extended leaves which are united at the point of contact by calyxes, crowns, etc. In the middle of this oval enclosure the vase is placed, and we see the little blossoms and flowers which were derived from the pomegranate, proceeding from the vase. The Renaissance with its more elegant forms produced the most varied compositions of the vase pattern.

FIGURE 45.

The great revolution in fashion which followed the introduction of the Spanish styles of dress did not fail to have an effect on the patterning of dresses. The narrow folds and slashings of the garments required small patterns, which merely relieved the ground, but laid no claim to attention on their own account.

FIGURE 46.

The tendrils and ribbons instead of filling large spaces, occupied much smaller ones in which a small palmetto, derived from the large designs of the 15th century, took the place of the large flower vase. The patterns are composed of elegant surroundings, enclosing symmetrical forms, such as the pomegranate or little flower vase, or lastly little clusters of flowers formed by three or five stalks bearing blossoms and leaves. The colors are now less brilliant. The period of the religious quarrels produced by the Reformation was a more serious one. Men's consciences were awakened, and this earnest time was reflected in the cut and color of the garments. In velvets, especially, the subdued tints added a wonderful effect.

During the period of transition from the 16th to the 17th century, the surroundings of the little patterns underwent a change and to some extent disappeared. We can discover the former existence of these surroundings in small branches or parallelograms united diagonally; the calyxes which formerly united the branches being separated from them and standing independent of one another. The symmetrical form, formerly standing in the centre is displaced by an unsymmetrical branch with blossoms and leaves. Finally the remaining part of the surroundings disappear altogether, and the typical pattern of the beginning of the 17th century is complete.

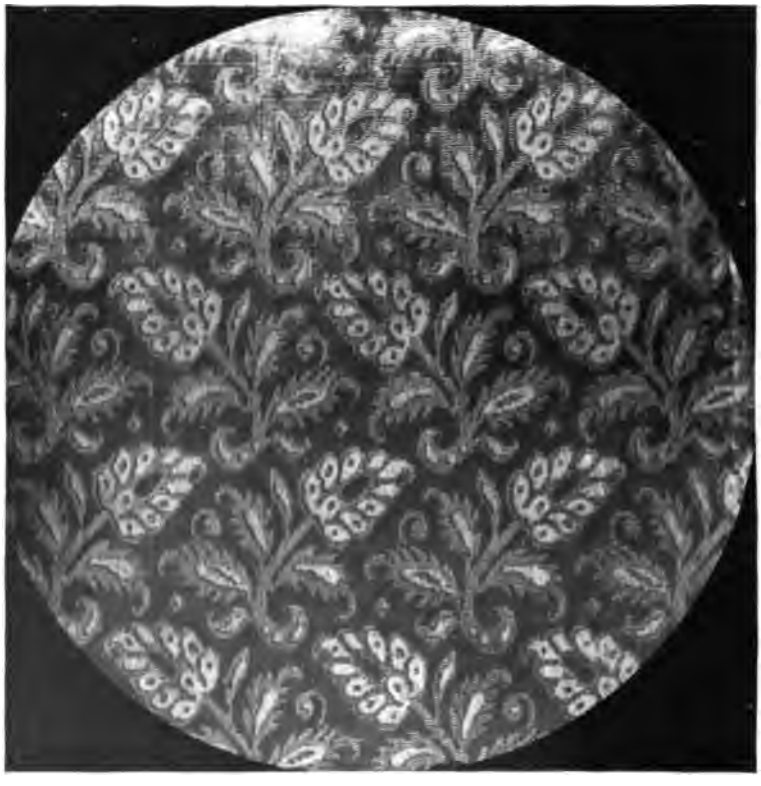

FIGURE 47.

It is composed of the unsymmetrical branches with blossoms and leaves, which appeared in the last variety of surroundings.

They are put in series leaning alternately to the right and left. The style of the drawing and the botanical detail of the plant forms are given with much variety as well as the size of the branches, bearing the flowers, which may be seen from two to ten inches long.

FIGURE 48.

This pattern is called in France "Fleurs Semées", that is to say Strewed Flowers.

But the more we advance in our researches, the greater number of varieties of textile designs we shall meet with. On the whole, greater freedom is to be remarked, in the general con-

struction of the designs as well as in the treatment of the simple forms, which approach more and more a realistic conception.

Under the influence of the Baroque and Rococo styles with their caprices, which disregarded a distinct and constructive arrangement of patterns, the originality, which was periodically common to the patterns of former times, is lost. We see a multitude of designs which are somewhat like one another in their character, but in which we miss the common motive which used to be continually repeated in the former designs, as for example, the pomegranate in each pattern of the 15th century.

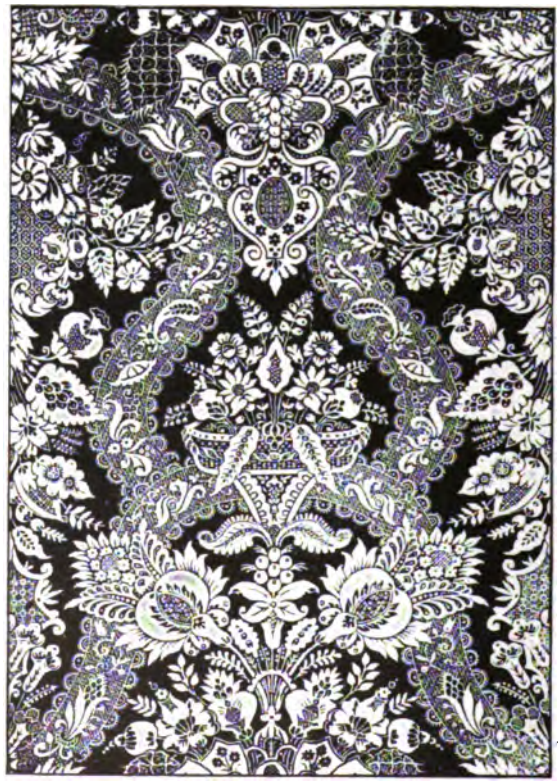

FIGURE 49.

The important lace manufacture, which flourished in France,

more particularly under the Minister Colbert, in the latter half of the 17th century, introduced a variety of very splendid designs for weaving. They are composed of flowery ornaments spreading out in the shape of a fan, and intersected by interwoven ribbons of lace, very cleverly imitated.

The so-called "lace patterns" betray the brilliancy and luxury of the time of Louis the 13th and 14th.

Other motives having their origin in far Eastern Asia appear in the reign of Louis 15th.

FIGURE 50.

About the year 1720 Louis 15th sent an extraordinary embassy to the Chinese Emperor bearing valuable presents, and under

instructions to co-operate in trade relations and to revive such as already existed. In return for this politeness the Chinese Emperor selected splendid presents for the King of France, composed chiefly of beautiful pieces of porcelain, lavishly decorated with Chinese figures and ornaments. This occurence rendered Chinese style fashionable in the upper circles of France for a short time, and the originality of this distant nation in their style of ornament appears in the textile designs of this period; Chinese vases, the characteristic dragon, landscapes with the curious Chinese perspective, pigtailed sons of the Chinese Empire in boats and so on.

Contemporary with these patterns after the Chinese style a noteworthy feature was the use of plant forms drawn from nature.

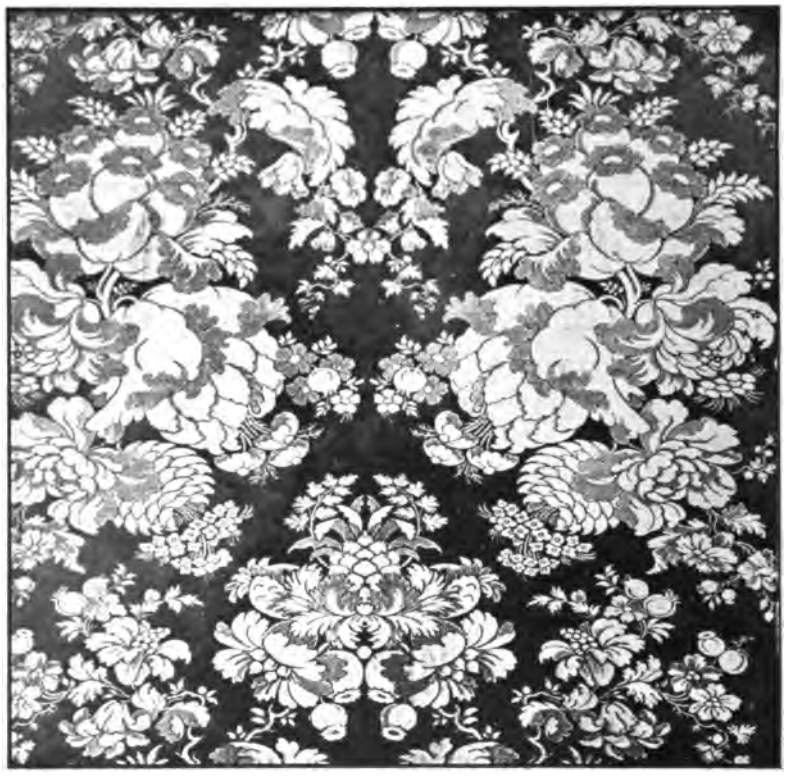

FIGURE 51.

Flowers and leaves are rendered with the full effect of light and shade, and the natural color of the flowers is imitated to the utmost. The rose is used for choice. But fruit also, cherries and plums, in fact a profuse flora in all possible fantastic forms, together with parts of architecture, cascades, shells, rocks, etc., served as model for the textile patterns of this time. Textile design has here reached its highest point, both in a capricious choice of motives, in combinations of brilliant colors, and in the richness of the bindings.

FIGURE 52.

In the time of Louis 16th, these grand designs, admirable, notwithstanding their quaintness, disappear, and give place to

patterns, which as regards delicacy of composition and softness of color, leave nothing to be wished for.

The large bunches of roses are diminished to very small elegant nosegays, shown upon a white ground with narrow stripes.

FIGURE 53.

The colors are reduced to such an extent that they no longer remind us of the preceding luxurious and splendid colored ornamentation. These small patterns are intermingled with every variety of hunting, fishing, music and such like symbols; fluttering ribbons, festoons, fruit baskets, etc., appear in the intervening spaces. They are the reflection of a period when ruin was approaching, and when no energetic effort was possible. The

designs on the textiles are a faithful mirror of the trivial social life of that time. But this state of things did not last for long.

FIGURE 54.

Probably in consequence of the excavations at Herculanium and Pompeii, motives were furnished for woven designs, which were taken from the wall paintings of classic antiquity. They bring us, after the desolation which the French Revolution spread over art, science, industry and trade to the style of the first French Empire which found its opportunity in the imitation of the antique.

FIGURE 55.

Thus having brought before you the change of patterns and styles from the earliest days to the commencement of the present century, I discontinue my researches. If we examine the rich collections of antique original woven fabrics which now are established in many towns, we shall be astonished by the manner in which our forefathers could produce wonderful effects with very insufficient mechanical assistance. And now the problem remains that we should study the rich treasures hoarded up in Textile Museums and make use of them for the textile industry, which, as we have already seen, is so very important to the welfare of entire towns and countries.

To encourage all these endeavors and to bring to notice all the beautiful and interesting subjects for investigation, which this subject offers, these remarks have been made, but they do not in any way pretend to have dealt exhaustively with such a very extensive subject.

After the addresses by President THOMPSON and Rear Admiral GEORGE W. MELVILLE, the meeting was adjourned *sine die*.

INDEX.

A

Aaron, Official Dress of 365
Active Members, Election of . . 115
Active Members, List of 13
Active Members, Qualifications for 5
Adams, Stephen L., Obituary of 52
Avancement of Science 127
Advantages of Cell Drying . . . 221
Agriculture, Department of, Resolution in Favor of 133
Aiken, Joseph D., Committee on Election of Members 118
Alexander, S. B. Jr., Elected an Associate Member 117
Allen, Franklin, Elected Active Member 115
Alphabetical List of Members . 13
Amendment to Charter 4
America's Textile Industry, A Southern View, Richard H. Edmonds 104–171
American Commercial Opportunities 130
American Cotton Co., Operation of 136
American Goods, Markets for, D. A. Tompkins 113–279
American Grown Egyptian Cotton, Lyster H. Dewey . . 103–157
Andres, Eugene C., Elected an Associate Member 117
Arabic Weaving 397
Arachne as a Weaver 372
Argentina Cotton Trade 284
Arlington Hotel, First Session . 139
Arlington Mills, Gastonia, N. C. Visit to 136
Arrangement of Cells for Drying Textile Fabrics 219
Asheville Cotton Mills, Visit to . 136
Asheville, Visit to 136
Associate Members, Election of 117
Associate Members, List of . . 28
Associate Members, Qualifications for 6
Assyrian Textiles 365
Atkinson, E. W., Improved Methods of Combing Cotton 113–349
Atlanta Mills, Visit to 137
Australia Imports 294
Avon Mills, Visit to 136

B

Baker, Dickerson G., Elected an Active Member 115
Band Clutches 332
Barrett, John, on Value of Chinese Trade 319
Bates, D. M., Our Cotton Export Trade with China . . 113–309
Bishop, F. H., Putting up of Yarns for Use and for Market 112–250
Board of Government 9
Botanical Classification of Cotton 140
Botanical Subdivisions of Cotton Plant 145

Bourne, Henry D., Elected an Active Member 115
Bowman on Cotton Fibre . . . 152
Brazil, Cotton Trade to 284
Brazil Exports to 300
British Cotton Trade to Brazil . 284
Brooks & Doxey, on Waste . . 235
Brooks, Prof. C. P., on Spinning of Waste 243
Burton, F. X., President of Riverside Cotton Mills 135
By-Laws 5
Byzantium, Silk Weaving in . . 380

C

Cake of Cotton Seed 142
Call to Meeting 65
Cape of Good Hope Cotton Trade 286
Cape of Good Hope Imports . . 295
Capital in Southern Manufactories 174
Capps Cotton Mills, Visit to . . 138
Causes of Color in Cotton . . . 208
Cells for Drying Textile Fabrics, Chas H. Fish 212
Chafee, John W., Elected an Active Member 115
Charlemagne, Burial Garment of 387
Charlotte, Manufacturers' Club, Invitation to 118
Charlotte, Visit to 136
Charter 3
Chili, Trade with 283
China, Cotton Export Trade with, D. M. Bates . . . 113–309
China Cotton Imports 305
Chinese Cotton Trade 284
Chinese Silk Culture 366
Clark, W. A., on Hybridization of Cotton 205
Clutches, Friction, Richard H. Hill 113–327
Collodion 143
Combing Cotton, Improved Methods of, E. W. Atkinson 113–349
Combing Cotton, New Methods of, H. G. McKerrow . . 113–341
Commerce and Civilization . . . 128
Commercial Museum at Philadelphia 129
Comparative Floor Space of Can and Cell Dryers 220
Conditions of Cotton Production in Egypt 159
Consolidation of Mills 231
Constitution and By-Laws . . . 5
Consular Report on Waste . . . 227
Consumption of Cotton at the South and North 175
Consumption, Southern, of Cotton in 1850 172
Coombes Drum Winding Machines 250
Cora Mills, Visit to 136
Cothran, J. S., Invitation to Manufacturers' Club at Charlotte, N. C. 118
Cotton Blankets 240
Cotton Crop 154
Cotton Crop for 1898 140
Cotton Crop, Spread of 145
Cotton Export Trade with China, D. M. Bates 113–309
Cotton Goods Imports 296
Cotton, Hybridization of 166
Cotton, Improved Methods of Combing, E. W. Atkinson 113–349
Cotton, Improvement of, H. J. Webber 197
Cotton Imports from China . . . 312
Cotton Manufacturers' Association Charter 3
Cotton Manufacturing in the United States, and Especially in the South, R. M. Miller, Jr. 104–188

Cotton Plant, Species of 146
Cotton Plant, Walter H. Evans 103–140
Cotton Seed Oil 143
Cotton Seed Oil, Productions of 143
Cotton Seed, Yield of 142
Cotton Statistics in 1860 189
Cotton Waste, E. W. Thomas . 112
Cotton Waste, Uses of, E. W. Thomas 112–227
Country, Our, A World Power . 128
Courtesies to the Association . 123
Cox, Thomas G., Member of Committee on Resolutions . . 133

D

Danville, Visit to 135
Denmark, Sale of Farm Products to 106
Development of Cotton Fibre . . 152
Development of Textile Patterns in Former Centuries, Prof. Paul Schulze 118–361
Dewey, Lyster H., American-grown Egyptian Cotton . 103–157
Dewey, Lyster H., Vote of Thanks to 133
Diameter of Cotton Fibre . . . 151
Diederich, Consul at Bremen, on Spinning of Waste 239
Drilling Mills, Visit to 136
Disc Clutches 335
Diseases of Cotton Plant . . . 198
Dobson & Barlow on Spinning of Waste 236
Dodge, Charles Richard, Enumeration of Fibre Plants 141
Dragons in Design 367
Draper, W. L., Elected an Associate Member 117
Drip in Drying Cans 213
Drying of Textile Fabrics, Chas. H. Fish 212
Dutch Coupling 331
Duties of Officers 7

E

Eagle in Designs 386
Early Experiments on Egyptian Cotton 165
Edna Cotton Mills, Visit to . . 135
Edmonds, Richard H., America's Textile Industry, A Southern View 104–171
Edmonds, Richard H., Vote of Thanks to 134
Efficiency of Cell Drying . . . 225
Egyptian Cotton 150
Egyptian Cotton, Color of . . . 208
Egyptian Cotton, American-grown, Lyster H. Dewey 103–157
Egyptian Ornament 362
Election of Members 115
Election of Officers 7
Evans, Dr. Walter H., Cotton Plant 103–140
Evans, Dr. Walter H., Vote of Thanks to 133
Experiments, Early, on Egyptian Cotton 165

F

Factory as an Element in Social Life, Hon. Carroll D. Wright 69–81
Falcon in Design 409
False Packing, Losses by . . . 232
Farrell, Geo. E., Elected an Active Member 115
Fibre, Length of 151
Fish, Charles H., Stationary "Cells" in Place of Rotating Cylinders 112–212
Fish, Charles H., Use of Stationary "Cells" in Place of Rotating Cylinders in the Drying of Textile Fabrics 112–212
Fisher, H. E., Entertainment by 137

Flather, Frederick A., Resolutions on Pan-American Exposition 111
Fletcher, F. C., Elected an Active Member 116
France, Cotton Trade to Brazil . 284
French Canadian Imigration . . 83
Friction Clutches, Richard H. Hill 113–327
Fries, John W., Elected an Active Member 115
Fulton Bag and Cotton Mills, Visit to 137
Fungus in Cotton Plants 207
Furbush, M. A., on Philadelphia Textile School 102

G

Gaffney, Visit to 136
Gage, Hon. Lyman J., Address to Association 75
Gage, Hon. Lyman J., Vote of Thanks to 133
Gary, James A., Telegram of Regrets 101
Gastonia, Visit to 136
Gate City Cotton Mills, Visit to . 136
Gegauff Cotton Comber 349
Georgia School of Technology, Visit to 137
Germany, Cotton Trade to Brazil 284
Germination of Cotton 149
Gilligan, John, Entertainment by 136
Government Tests of Cloth . . 273
Grant, Geo. P. Jr., Committee on Election of Members . . . 118
Gray, Arthur F., Elected an Associate Member 117
Greek Designs 388
Gregg, Wm., on Southern Cotton Manufacturing 172
Griffin Cotton Mills, Visit to . . 138
Grinnell, Consul, Letter to, on English Waste 235
Gun Cotton 143

H

Heilman Cotton Comber 349
Hendersonville, Visit to 136
Heroditus on Cotton 143
High Point, Visit to 135
Hill, R. H., Friction Clutches 113–327
Hobbs, Alfred K., Elected an Associate Member 117
Holland, John, Obituary of . . . 51
Holloway, Consul at St. Petersburg, on Spinning of Waste . 240
Holt, Walter L., Elected an Active Member 116
Honorary Members, List of . . . 13
Honorary Members, Qualifications for 6
Humbolt on Range of Cotton . . 148
Hybridization of Cotton . . 108–166

I

Imperialism 95
Improved Methods of Combing Cotton, E. W. Atkinson . 113–349
Improvement of Cotton, Dr. H. J. Webber 197
Increase of Spindles at the South 191
Indian Drills 311
Integrity of Vested Interests . . 92
In Memoriam 51
Italian Weaving 406

J

James, Gen. Chas. T., on Southern Cotton Manufacturing . . 172
Jannovitch Cotton 166
Japanese Sheetings 311
Johannsen, Prof. Otto, on Cotton Combing 350
Justinian, Encouragement of Textiles 380

K

King's Mountain Mills, Visit to . 136
King's Mountain, Visit to . . . 136

L

Larcom, Lucy, at Lowell Cotton Mills 82
Lawrence, Amos A., on Southern Cotton Manufacturing . . 172
Lawton, John E., Cablegram of Congratulations 102
Lawton, Samuel D., Elected an Associate Member 117
Length of Cotton Fibre 159
Likin Tax in China 321
Linnæus, Description of Cotton Plant 145
Long, Hon. John D., Address of Welcome 77
Long, Hon. John D., Vote of Thanks to 133
Loray Mills, visit to 136
Losses from Financial Paralysis . 93
Lotion for Raising Hair 4000 B. C. 362
Lotus, Foundation of Design . . 363
Lovering, Wm. C. on Southern Cotton Manufacture 178
Lowell Offering 82
Lowell operatives in Last Generation 82
Lowell, Visit to 136
Lula Mills, Visit to 136

M

Maddox, Amos G., Elected an Active Member 116
Mallow Type in Botany 140
Manchuria, Annexation 292
Manufacturers' Club, Charlotte, Visit to 136
Manufacturers' Club, Invitation to 118
Manufacturers' Record 168
Markets for American Goods, D. A. Tompkins 113–279
Mason, Consul at Berlin on Spinning of Waste 238
Massachusetts, Commonwealth of, Amendment to Charter . . 4
Massachusetts Spinning Schools 180
McGaw, D. E., Address of Presentation 137
McGaw, D. E., Elected an Associate Member 117
McKerrow, H. G., New Methods of Combing Cotton . 113–341
McKinley, Wm., President of the United States, Reception by 69
Medal to Students 71
Meetings, By-Laws on 8
Melville, Rear Admiral Geo. W., Address of Welcome 120
Melville, Rear Admiral Geo. W., Vote of Thanks to 133
Members of the Association . . 13
Members, Geographical List of . 34
Membership, Location of . . . 50
Membership, Qualifications for . 5
Membership, Total 33
Mexico Imports 298
Miller, R. M., Jr., Possibility of Cotton Manufacturing in the United States and Especially in the South 104–188
Mineral Resources of the South . 194
Mit-Afifi Egyptian Cotton . . . 158
Mitchell, John R., Elected an Associate Member 117
Modena, Mills, Visit to 136
Monfort Cotton Comber 341
Mohamedan Design 390
Montgomery, J. R., on Color of Egyptian Cotton 208
Morality of Cotton Mill Operatives 86

Mount Vernon 124
Mussulman Weaving 396

N

Natal Cotton Trade 286
Natal Imports 295
Negro Labor 192
New Methods of Combing Cotton, H. G. McKerrow . . 113-341
New Zealand Imports 300
Nicaragua Canal 293
Nicholas, Wm. G., Member of Committee on Resolutions . . 133
Nichols, Wm. G., on Size of Bolls of Cotton Plants 207
Norman Development of Silk Weaving 391

O

Officers 6
Officers, Duties of 7
Officers of the Association in the Past 10
Open Door to China 322
Oriental Muslin 144
Our Country a World Power . . 128
Ovid on Spinning 371
Ozark Mills, Visit to 136

P

Paisley Thread Works 86
Palermo Weaving 392
Pan-American Exposition . . . 102
Pan-American Exposition, Resolutions on 111
Papyrus, Foundation of Design . 363
Parker, Walter E., Desirability of Different Tints of Cotton . 210
Patterson, Sam'l F., Elected an Active Member 116
Pernambuco Cotton 149
Persian Designs 378
Phidias Representing Weaving . 371
Philadelphia Commercial Museum 129
Philadelphia Textile School . . 102
Phœnix in Design 368
Photograph of Washington Party 113
Physicists needed for Soil Analysis 109
Pierce, Moses, Donation to Association 71
Pierce, Moses, Obituary of . . . 53
Pitcairn, Consul at Hamburg, on Spinning of Waste 239
Pliny on Cultivation of Cotton Crop 145
Pliny Describing Cotton 144
Pompeii, Furnishing of Motives for Design 429
Possibility of Cotton Manufacturing in the United States and Especially in the South, R. M. Miller, Jr. 104-188
Preliminary Notice of Washington Meeting 64
President's Address, D. M. Thompson 90
President of the United States, Reception by 73
Proceedings 57
Production of Egyptian Cotton in the United States 160
Programme of Washington Meeting 69
Putting up of Yarns for Use and for Market, F. A. Bishop 112-250

Q

Queensland Imports 297

R

Reception by the President of the United States 69
Reciprocity Treaty with Brazil . 289
Reidsville, Visit to 135

Remarks on Mount Vernon . . 124
Renfrew, James, Obituary of . . 56
Rennie, T. H., Elected an Active Member 116
Review of Reviews, Citation from 229
Revolution of the Earth 126
Reworking Waste 234
Richards, M. V., Presentation to 137
Riley, C. E. & Co., of Boston, on Spinning of Waste 242
Rim Clutches 332
Rio de Janeiro Imports 302
Rivers, Elias L., on Sea Island Cotton Cultivation 200
Riverside Cotton Mills, Visit to . 135
Roberts, Silas I., Superintendent of Riverside Cotton Mills . 135
Robinson, Edwin A., Elected an Active Member 116
Root, Hon. Elihu, Message of Regrets 101
Rose, W. H., Elected an Active Member 116
Round Bale, Trials of 232
Rusden, E. A., Elected an Associate Member 117
Rushton Cotton Mills, Visit to . 138
Russian Export of Cotton Textiles 286

S.

Sanborn, Edward H., Elected an Active Member 116
Saracenic Design 411
Sassanide Weavings 379
Scarabeus, Foundation of Design 363
Schulze, Prof. Paul, Development of Textile Patterns in Former Centuries 118–361
Schulze, Prof. Paul, Vote of Thanks to 134
Science, Advancement of . . . 127
Sea Island Cotton 147–197
Sea Island Cotton, Origin . . . 147
Search, Theodore C., Elected an Active Member 116
Sears, C. M., on Wilt in Cotton Plants 211
Shanghai Chamber of Commerce 314
Shanghai, Port for American Goods 311
Shepherd, J. A., Elected an Associate Member 117
Sherman, Wm. F., Chairman of Committee on Election of Members 118
Slater, Arba C., Obituary of . . 54
Smith, Charles E., Letter of Regrets 101
Smith, Geo. R., Vote of Thanks to 134
Smith, Geo. R., Yarn Testing and Testing Machines . . 112–258
Smith, Hamilton, on Southern Cotton Manufacturing 172
Smith, Thomas H., on Fungus in Cotton Plants 207
Solar System, Dimensions of . . 126
Southern Consumption of Cotton in 1850 172
Southern Interstate Fair, Visit to 136
Southern Railway Co., Invitation to Trip 73
Southern Railway Co., Vote of Thanks to 134
Southern Railway, Complimentary Excursion 71
Southern Railway Trip 103
Southern Trip, Account of . . . 135
Spartanburg, Visit to 136
Spaulding Cotton Mills, Visit to 138
Species of Cotton 151
Species of Cotton Plant 146
Spheres of Influence in China . 322
Spinning Schools in 1640 . . . 180

Stafford, H. E., Elected an Associate Member 117
Stationary Cells for Drying Fabrics 217
Stationary "Cells" in Place of Rotating Cylinders, Chas. H. Fish 112–212
Steel Rails to England 288
Stimulus to Cotton Production . 154
Students' Medal 71
Subsidies 291
Sun Worshipers 364
Sunderland, D. G., Elected an Active Member 116
Sweat System 85
Switzerland, Early Silk Design . 374
Sykes, John, Elected an Associate Member 117
Syphon for Drying Cans 215

T.

Taccoa Cotton Mills, Visit to . . 138
Tasmania Imports 298
Technical Education, Importance of 131
Test of Yarns, Tabulation of . . 259
Textile Patterns, Development of in Former Centuries, Prof. Paul Schulze 118–361
Textile Patterns in Former Centuries, Development of, Paul Schulze 118–361
Textile Schools 180
Thanks, Resolutions of 133
Thayer, Winthrop, Obituary of . 51
Thomas, E. W., Uses of Cotton Waste 112–227
Thompson, D. M., Acknowledgment of Mr. Edmonds' Address 186
Thompson, D. M., Introduction of Hon. Carroll D. Wright . . 79
Thompson, D. M., Introduction of Hon. James Wilson . . . 105
Thompson, D. M., Introduction of Hon. John D. Long . . . 76
Thompson, D. M., Introduction of Rear Admiral, Geo. W. Mellville 118
Thompson, D. M., Introduction of Secretary Gage 74
Thompson, D. M., President's Address 90
Thompson, D. M., President's Closing Address 123
Thompson, James O., Elected an Active Member 116
Thornton, James T., Elected an Associate Member 118
Thurston, Rienzi W., Elected an Associate Member 118
Tillinghast, Geo. E., Elected an Associate Member 118
Tobacco, Flavor of 110
Todd, W. O., Elected an Active Member 116
Tompkins, D. A., Markets for American Goods 113–279
Transactions 139
Trelease, Dr. Wm., on Fertilization of Cotton Flowers . . . 153
Treaty Ports in China 315
Truesdell, O. B., Entertainment by 136
Tuley, Philip S., Elected an Active Member 116
Turkey Cotton Imports 303

U

United States, Cotton Trade to Brazil 284
Universal Winding 251
Universe, Immensity of 125
Upland Cotton 147
Uruguay Cotton Trade 285
Uses of Cotton Waste, Edward W. Thomas 112–227

Uses of Stationary "Cells" in Place of Rotating Cylinders in the Drying of Textile Fabrics, Chas. H. Fish 112–212

V

Vegetables for Thread 142
Vested Interests, Integrity of . . 92
Victoria Imports 299

W

Wardwell, Inventor of Universal Winding System 251
Ware, Justin A., Chairman of Committee on Resolutions . . 133
Washington Meeting, Attendance at 57
Washington, Points of Interest in 67
Washington, Trip to 66
Waste, Amount of 226
Waste in England 235
Weaving, Antiquity of 143
Webber, Dr. H. J., Improvement of Cotton 197
Webber, Dr. H. J., Vote of Thanks to 133
Wentworth, W. H., on Cultivation of Egyptian Cotton . . . 165
Wheat, H. D., Entertainment by 136
Whitney, Eli, Inventor of Sawgin 183
Whittier, Nelson, Elected an Active Member 116
Whittier, W. R. B., Elected an Active Member 116
Willingham, Broadus E., on Coarseness of Cotton Fibre . 208
Willingham, Broadus E., Elected an Active Member 116
Wilson, Hon. James, Address of Welcome 105
Wilson, Hon. James, Vote of Thanks to 133
Wilt of Cotton Plant 198
Wood, Oscar W., Elected an Active Member 117
Wright, Hon. Carroll D., Factory as an Element in Social Life 69–81
Wright, Hon. Carroll D., Vote of Thanks to 133

X

Xerxes Using Cotton 144

Y

Yarns, Putting up of for Use and for Market, F. H. Bishop 112–250
Yarn Testing and Testing Machines, Geo. R. Smith . . 112–258

HOWARD & BULLOUGH

American Machine Co., Ltd.

PAWTUCKET, R. I.

BUILDERS OF

COTTON MACHINERY.

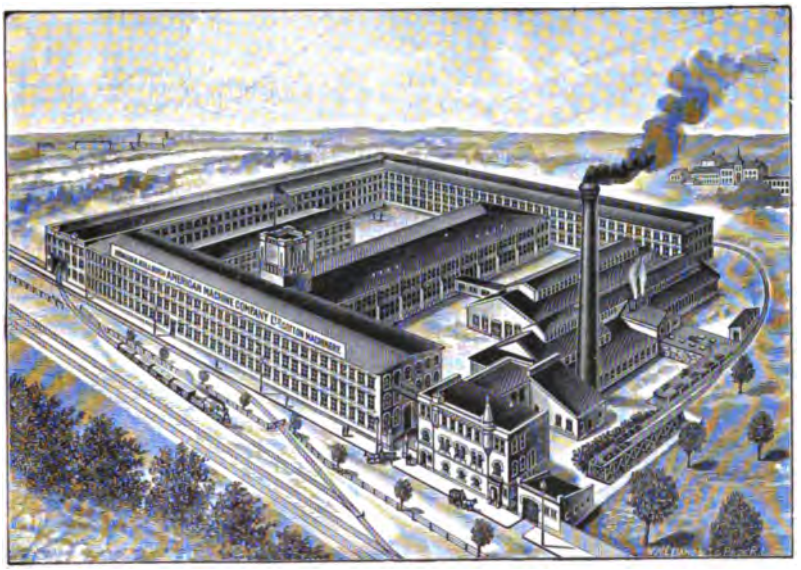

BALE BREAKERS, FEEDERS,
SELF FEEDING OPENERS,
BREAKER, INTERMEDIATE and FINISHER LAPPERS.

REVOLVING FLAT CARDS,
DRAWING FRAMES { with Mechanical or Electrical Stop-motions.
SLUBBING, INTERMEDIATE and ROVING FRAMES.

NEW PATTERN SPINNING FRAMES.

IMPROVED TWISTERS.

CONE WINDERS.

WE INVITE INVESTIGATION AND COMPARISON.

THE NAME OF

"KITSON"

Has for more than Fifty Years stood for all that is Best in

Picker Construction.

Our Works are Devoted Exclusively to the Manufacture of

Picker Room Machinery

For Preparing Cotton and Waste for Carding.

Kitson Machine Co.

Lowell, Mass.

STUART W. CRAMER, Southern Agent, Charlotte, N. C.

Saco AND Pettee Machine Shops

Main Office: NEWTON UPPER FALLS, MASS.

COTTON MACHINERY

OF THE

LATEST IMPROVED PATTERN.

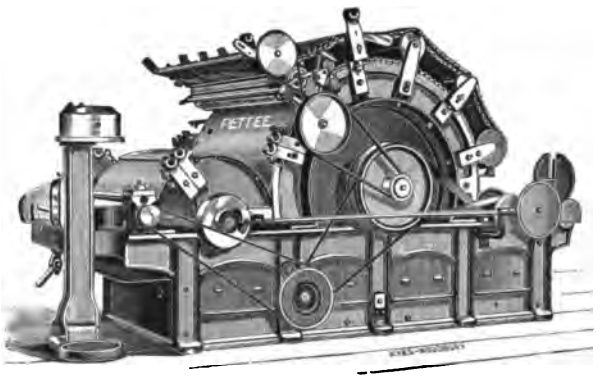

Picking Machinery,
Revolving Flat Cards,
Railway Heads,
Drawing Frames,

Slubbing,
Intermediate,
Roving and
Spinning Frames.

SHOPS: . . . { Biddeford, Maine. / Newton Upper Falls, Mass.

☞ Send for estimates and prices.

69—70

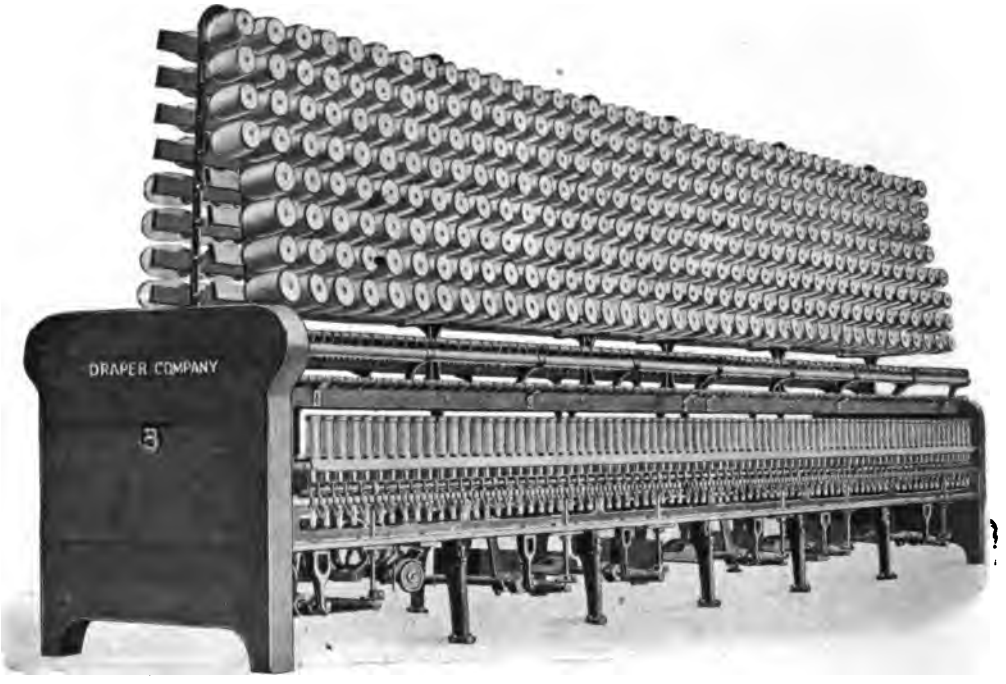

Our New Twister.

Made Throughout from New Patterns.

Extra Weight,
Draper Twister Spindles.

Adjustable Legs,
New Patented Details.

BUILT FOR SPEED.

The demand for our Twisters steadily increases. We also build Northrop Looms, Warpers, Spoolers, Reels, Banding Machines, Spindles, Temples, Round Spinning Rings, Separators, Etc.

THE DRAPER CO., HOPEDALE, MASS.

PHILADELPHIA
TEXTILE SCHOOL.

[PENNSYLVANIA MUSEUM AND SCHOOL OF INDUSTRIAL ART.]

SEVENTEENTH YEAR.

Instruction Given in All Branches of the Manufacture of Cotton, Wool, Worsted and Silk.

Complete Modern Equipment for Carding, Spinning, Dyeing, Weaving and Finishing.

1901.—Day Classes open September 30, Evening Classes open October 7.

Endorsed by leading manufacturers and educators. Send for Illustrated Year Book.

EDWARD W. FRANCE, Director.
Broad and Pine Sts., Philadelphia.

69—70

National Ring Traveler Co.

MAKERS OF ALL STANDARD

Spinning and Twisting Travelers

OF EVERY DESCRIPTION.

PROVIDENCE, R. I.

We are the Original and Only Makers of the

Famous WILSON ROUND-POINTED Spinning Traveler.

69—70

Stoddard, Haserick, Richards & Co.

BOSTON, MASS., LONDON AND BRADFORD, ENGLAND.

Bankers and Importers.

Sole Representatives for

DOBSON & BARLOW, Ltd., - - - Bolton.

Improved Bi-Simplex Carding Engines, with Patent Anti-Flexion Grinder.
Heilman Combs, Single and Duplex.
Ribbon Lap Machines. Sliver Lap Machines.
Slubbers, Intermediates, Rovers and Jacks.
Improved Self-Acting Mules for Cotton.
Gassing Frames and Winders.
SPECIAL Opening and Picking Machinery for Delicate Cottons.
SPECIAL attention given to Medium and Fine Counts.
WORSTED CARDING ENGINES.
WORSTED MULES.

SAMUEL LAW & SONS, Ltd., - - Cleckheaton.

CARD CLOTHING OF ALL DESCRIPTIONS.

TAYLOR, WORDSWORTH & CO., - - Leeds.

NOBLE COMBS and BACKWASHERS.

PRINCE SMITH & SON, - - - Keighley.

WORSTED DRAWING and SPINNING MACHINERY.
BRADFORD SYSTEM and CONE SYSTEM.

Société Alsacienne de Constructions Mécaniques, Mulhouse.

WORSTED DRAWING on FRENCH SYSTEM.
GEGAUFF COTTON COMBER.

EGYPTIAN COTTON

FROM

CARVER BROS. & CO., Ltd., Alexandria and Liverpool.

S. A. FELTON & SON COMPANY,

Manufacturers of

MILL BRUSHES.

COMBER DUSTER.

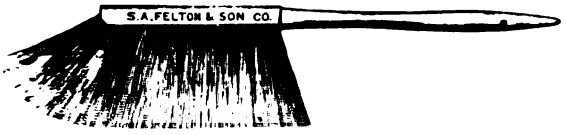

CYLINDER COMBER BRUSH.

CYLINDER COMBER DUSTER.

LOOM DUSTER

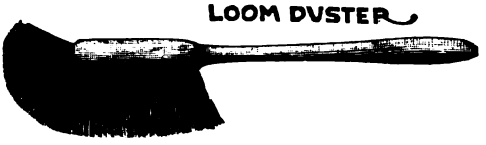

PRINT WORKS FINISHER.

REED BRUSH

CARD OR GRINDER BRUSH.

REVOLVING FLAT CARD BRUSH.

FINGER BRUSH.

PICKER BRUSH.

DOCTOR BRUSH.

FLOOR BRUSH.

Factory and Main Office, - - MANCHESTER, N. H.

Boston Office, 19 High Street.

Send for Booklet. ***Telephone Connections at both Manchester and Boston Offices.***

69—70

ELIJAH ASHWORTH,

Manufacturer of Card Clothing.

Bright Hardened and Tempered Steel Wire, Plough Ground or Surface Ground.

CLOTHING FOR REVOLVING FLAT CARDS A SPECIALTY.

All makes of Top Flats Reclothed by Ashworth's Patent Steel Clamp Fastening.

ESTIMATES PROMPTLY GIVEN.

HENRY ASHWORTH, Agent, Fall River, Mass.

69—70

General Fire Extinguisher Co.

Manufacturers, Jobbers and Dealers in PIPE, FITTINGS, VALVES, HYDRANTS, and all kinds of Steam, Gas and Water Supplies and Specialties.

Factories and Warehouses equipped with the GRINNELL AUTOMATIC SPRINKLER, on the wet pipe or dry pipe system, as may be desired.

The Grinnell Dry Pipe System affords thorough protection all the year around for buildings in which the water in a wet pipe system would freeze.

Information and proposals furnished at the Several Department Agencies, and at the

Executive Offices, PROVIDENCE, R. I.

69—70

GENERAL ELECTRIC COMPANY'S

Electric Equipment for Textile Mills

Latest Installation.

OLYMPIA MILLS, COLUMBIA, S. C.

The largest single mill building ever erected.

Power supplied by three three-phase General Electric 1300 Kw. generators, direct-connected to steam engines.

Number of spindles, 104,000.

Number of looms, 2,400.

Every machine in this mill driven by General Electric Induction Motors.

Estimates furnished on application.

GENERAL ELECTRIC COMPANY

General Office: - Schenectady, N. Y.

New York Office, 44 Broad Street, Boston Office, 200 Summer Street.
Philadelphia Office, 214 South Eleventh Street.
Atlanta Office, Equitable Building. Baltimore Office, 227 E. German St.

LONDON OFFICE: - 110 CANNON STREET, E. C.

LOWELL MACHINE SHOP,

Lowell, Mass.,

Cotton Machinery.

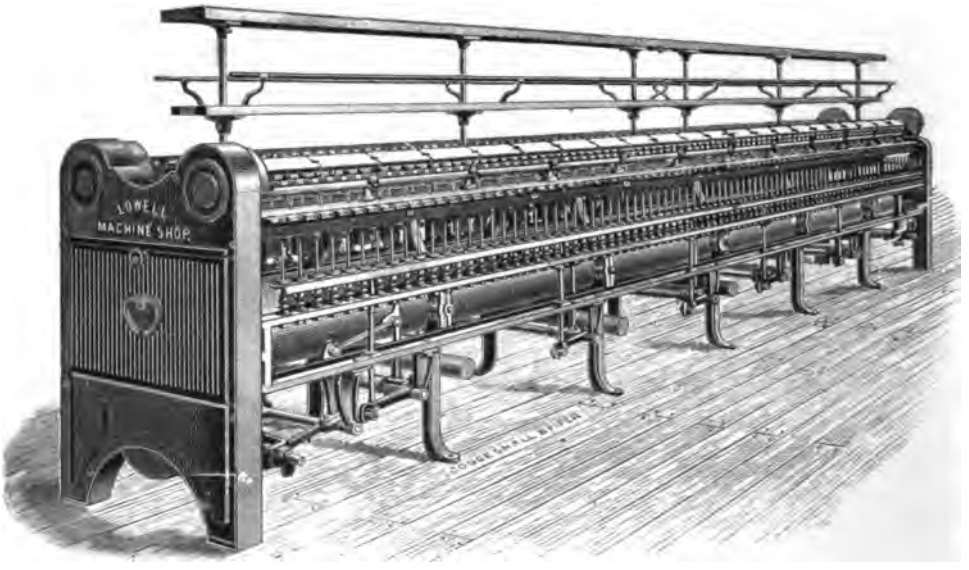

Revolving Flat Cards,
Railway Heads,
Drawing Frames,
Roving Frames,
Ring Spinning Frames,
Twisters, Spoolers,
Warpers, Slashers,
Looms.

WORSTED MACHINERY.

FOR a Fly Frame that will give you a large production at small amount of cost and horse power, go to the WOONSOCKET MACHINE & PRESS COMPANY, Woonsocket, R. I. They also manufacture Cloth Trimmers, Shafting, Hangers, Pulleys, Friction Clutches, &c.

Plymouth Cordage Co. North Plymouth, Mass.

G. F. HOLMES, Treas.

MANUFACTURE FINEST QUALITY

ROPES AND BINDER TWINES OF ALL DESCRIPTIONS.

THE RAW MATERIAL.

THE FINISHED PRODUCT.

BALE ROPE is one of our SPECIALTIES. We are LEADERS in Strictly First Class TRANSMISSION ROPE.

☞Send for our Booklet "Manila Rope Transmission." If may be of interest and value to you.

69—70

Freight and Telegraph Address:
SACO, ME.

H. P. GARLAND,
Treasurer.

Loom Picker Co.

Manufacturers of

Loom Pickers, Loom Harnesses,
Loom Reeds,
Ticking Lug Straps,
Hickory Picker Sticks,
Picker Loops and Picker Leather.

Biddeford, Maine.

69—70

T. C. ENTWISTLE,

MANUFACTURER OF

Patent Warping, Balling, and Beaming Machines.

ALSO

All Kinds of Common Expansion Combs for Warpers, Beamers, and Slashers,

AND

TRAVERSE WHEEL CARD GRINDERS FOR AMERICAN OR ENGLISH COTTON, WOOLEN OR WORSTED CARDS.

Market and Worthen Streets, - LOWELL, MASS.

69—70

COTTON MILLS

By utilizing the waste heat from your flue gases you are enabled to heat your feed water considerably above boiling point. You can use the most economical condensing auxiliary pumps, with a maximum waste of exhaust, having hot feed water from the economizer. You can use the hot water for heating your mill successfully. You can make a SAVING in fuel of 12 per cent. to 20 per cent. You can make a saving in repairs to your boilers. You can increase the efficiency of your plant. HOW? By using a *Green's Economizer.*

69—70

A RECORD;
30,000,000 H. P. IN USE.

SAVE FUEL BY USING

GREEN'S ECONOMIZER.

SOLE MAKERS IN THE U. S. A.

The Green Fuel Economizer Co.,

MATTEAWAN, N. Y.

BOSTON, 53 State Street.
NEW YORK, 74 Cortlandt Street.

Bleach and Dye Works

By using the hot water from the economizer in your kiers and vats you can save 12 per cent. to 20 per cent. in FUEL. You can save 20 per cent. in TIME in the boiling process. You need never run short of steam. You can have hot feed water for your boilers as well as hot water for your DYE HOUSES. You can do better work with less waste. Less complaint from your Dyer about not having enough steam, and less grumbling from your engineer that the Dye House is using all the steam with general satisfaction all around. HOW? By using *Green's Economizer.*

L. S. Watson Manufacturing Company,

LEICESTER, MASS.

Manufacturers

WIRE HEDDLES

PATENT

of every description used in

COTTON AND WOOLEN MILLS.

ALSO EXTENSIVE MANUFACTURERS OF

Superior Harness Frames—Iron End Frames a Specialty.

Special attention is called to our Heddles and Harness Frames as being perfectly adapted to weaving the finest fancy cotton goods. We are also *AGENTS and IMPORTERS of the German Tinned Cast Steel Wire Heddles.*

These Heddles are made with soldered warp eyes, also soldered end eyes, and are the most DESIRABLE FOREIGN HEDDLE MADE.

Correspondence and Orders solicited. Write us for Samples and Prices

69—70

The American Correspondence School of Textiles

GIVES

COURSES OF INSTRUCTION BY MAIL,

In Cotton Picking, Carding, Spinning, Warp Preparation, and Weaving, Mill Calculations, Mill Engineering, and Textile Designing.

Printed Lessons, complete and up to date, forming the finest library of textile information in existence.

Send for Free Catalogue.

C. P. BROOKS, Director,
New Bedford, Mass.

69—70

The Equipment of

THE NEW BEDFORD TEXTILE SCHOOL

New Bedford, Mass.

is acknowledged by all to be the finest existing collection of cotton machinery under one roof.

Practical instructors.

Gold medal Paris Exposition of 1900.

Inspection invited.

Send for Free Catalogue to

C. P. BROOKS,
Managing Director,
New Bedford, Mass.

69 - 70

American Cotton Yarn Exchange,

Combed and Carded Cotton Yarns

From Northern and Southern Mills.

American, Egyptian, Peruvian and Sea Islands.

ARNOLD B. SANFORD, PRES. AND GEN. MGR.

NO. 67 CHAUNCY ST., BOSTON, MASS.

Long Distance Phone, No. 1120 Oxford.

69—70

Inspection. Protection.

HARTFORD STEAM BOILER INSPECTION AND INSURANCE CO.
HARTFORD, CONN.

J. M. ALLEN, President.

W. B. FRANKLIN, Vice-President.

F. B. ALLEN, 2d Vice-President.

J. B. PIERCE, Sec'y and Treas.

Northeastern Department,

C. E. ROBERTS, - - - Manager,

125 MILK STREET,

BOSTON.

INCORPORATED JUNE 4, 1890.

American Card Clothing Co.

GENERAL OFFICES: Worcester, Mass.

SEND ORDERS TO FACTORIES:

Worcester, Leicester, North Andover,
Lowell, Philadelphia, Pa. Providence, R. I.

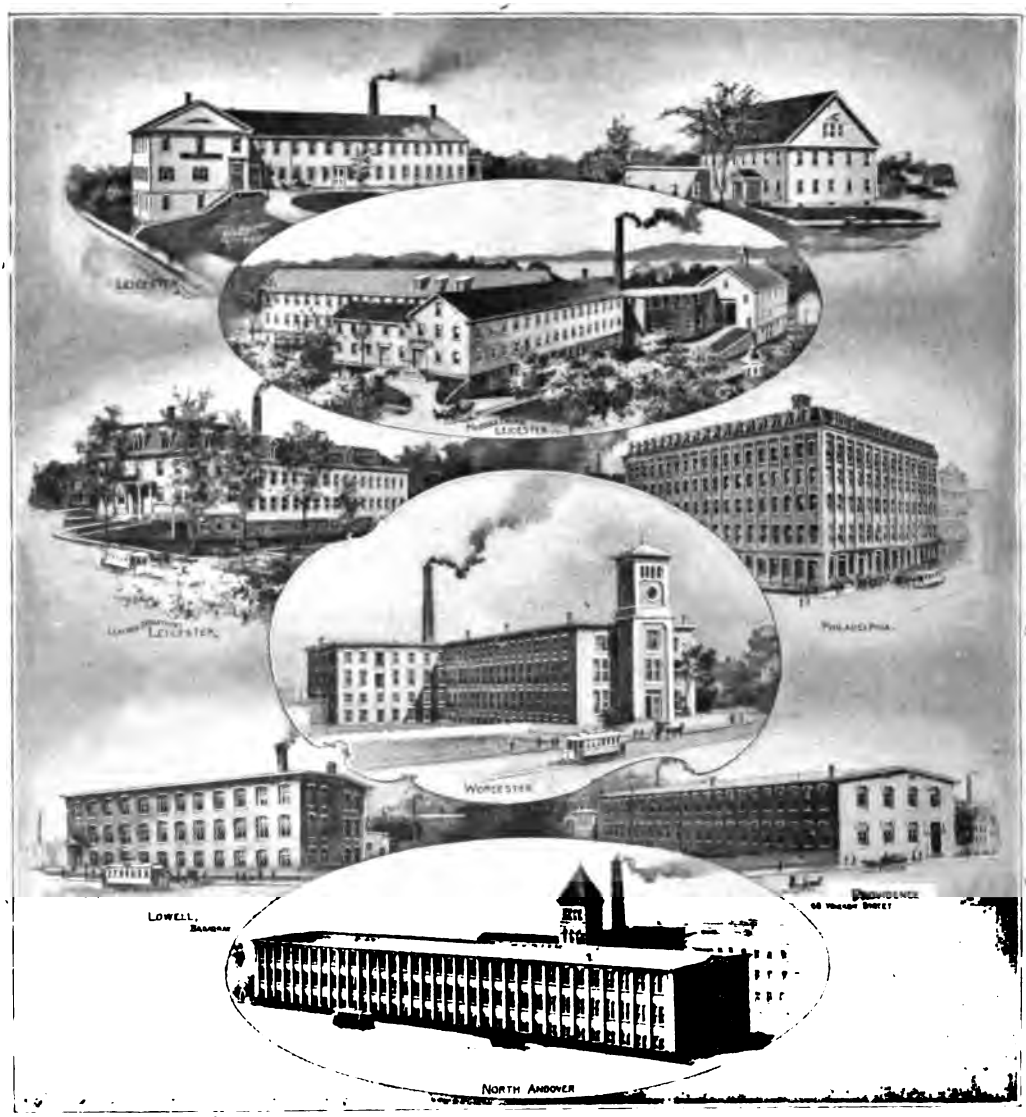

Manufacturers of Every Description of CARD CLOTHING.

Special Attention given to Clothing for Revolving Top Cards. Experts Furnished to Clothe and Start the same.

Hardened and Tempered Steel Wire Card Clothing. Plough Ground or Surface Ground. Revolving Top Flats covered and fastened with Steel Clips.

Southern Branch Office, Durham Block, Charlotte, N. C.

Not in Fifty Years,

BUT IN TWELVE,

WE HAVE EQUIPPED OVER ONE-HALF

OF THE

COTTON MILLS IN THE UNITED STATES.

It took Decided Merit to do this!

THE

A. T. Atherton Machine Co.

Pawtucket, R. I.

The Leading Manufacturers of

PREPARATORY COTTON MACHINERY.

AMERICAN
LUXFER PRISM
COMPANY.

EXCLUSIVE OWNERS OF RIGHTS TO MANUFACTURE AND SELL PRISMATIC WINDOW GLASS, UNIVERSALLY KNOWN AS LUXFER PRISMS.

About one hundred and seventy (170) installations of Luxfer Prisms have been made in mills, factories, and machine shops throughout New England.

Circulars and estimates mailed upon receipt of inquiry.

GEORGE K. MALTBY,
New England Manager,

EQUITABLE BUILDING,
BOSTON, MASS.

Telephone, Boston 1071

69—70

The Garland System of Moistening the Air

Produces and maintains any desired relative humidity on every day of the year.

Uniformly distributes the moisture, so that all parts of the rooms are moistened alike.

Takes pure air from out of doors and forces it into the rooms under a pressure of 20 pounds per square inch, thus assisting ventilation by displacing an equal volume of foul air.

Requires practically no care, except that necessary for the regulation of humidity.

For Estimates, Circulars and References, address,

Garland Air Moistener Company,

SACO, MAINE.

69—70

PORCELAIN CREEL STEPS.

5219

258

143

We claim Porcelain Creel Steps to be superior to any other step in use:

They are thicker than the ordinary steps, therefore not so liable to split;
They are rough on the outside, therefore do not work loose;
They outlast the glass steps many times and are smoother in the cup.

Are your machines fitted up with the Porcelain Creel Steps? If not, your equipment is not of the best.

We will send you samples free of cost if you will give them a trial. If you find them as we represent, insist that your machine builder uses them in all new machines furnished, or in repairing your old ones.

Mitchell-Bissell Co.,

38 Murray St., NEW YORK. **Bourse Building, PHILADELPHIA.**

69—70

WILLIAM FIRTH, *Pres.* EDWIN BARNES, *Vice-Pres.* JOHN H. NELSON, *Treas.*

William Firth Company,

67 EQUITABLE BLDG., 150 DEVONSHIRE ST., BOSTON.

IMPORTERS OF

ASA LEES & CO., Limited, Textile Machinery, including Bale Breakers, Revolving Flat Cards for cotton, Drawing Frames, Slubbing Frames, Intermediate Frames, Roving Frames, Combers, Ribbon and Comber Lap Machines, Carding Engines for wool wadding, and also Condensers, etc.

Southern Agents for Fall River Machine Company. Ring Spinning Frames and Coiler Railway Heads.

Sole Agents for William Tatham & Co. Waste Machinery.

Joseph Stubbs. Gassing, Winding and Reeling Machinery for cotton, worsted and silk.

John Perry, Limited. Worsted Machinery on French and English Systems, also patent Wool Washers and Special Silk Machinery.

George Orme & Co.'s Patent Hank Indicators, Etc.

James Yates & Son. Hardened and Tempered Steel Card Clothing for woolen and worsted cards.

Selling Agents for Joseph Sykes Bros. Hardened and Tempered Steel Card Clothing for cotton.

Dronsfield Bros., Limited. Emery Wheel Grinders and Emery Fillet.

R. Centner Fils. Steel Wire Heddles.

Southern Office, 40 So. Forsyth St., Atlanta, Ga., C. E. W. DOW, Representative.

69—70

Patented Feb. 26, 1889.
Patented Oct. 21, 1890.

69—70

A VOTE

by the manufacturers of the country as to the merits of our Spinning Rings and others, we feel sure would land us ahead with a big majority.

We are doing honest work on our products, and using the best stock obtainable. We believe we have the confidence of mill men everywhere.

Our U. S. S. Traveler Cleaner is perfection itself.

Our Patent Traveler Cup is a great economizer of Travelers.

Whitinsville Spinning Ring Co.,

WHITINSVILLE, MASS.

JACQUARD

Card Cutting Machinery.

We are specialists in this line. We build machines by the use of which the cost of preparing jacquard cards for the loom is reduced to the lowest figure.

We make Piano Machines (foot and power) for cutting original pattern packs, Repeaters, for duplicating cards; and Lacers for automatically feeding and punching and lacing blank cards into packs. . . . . .

JOHN ROYLE & SONS,

69—70 **PATERSON, N. J.**

Charles River Iron Works.

EDWARD KENDALL & SONS,

MANUFACTURERS OF

STEAM BOILERS

And Plate Iron Work of every description.

HIGH PRESSURE BOILER PLANTS FOR COTTON MILLS OUR SPECIALTY.

END OF WEST BOSTON BRIDGE.

ESTABLISHED 1860. **CAMBRIDGEPORT, MASS.**

68—69